WORLD CLASS MANUFACTURERS OF

CONTROLLED BOLTING

EQUIPMENT

+44 (0) 1670 700 018 SALES@HTL-WORLDWIDE.COM WWW.HTL-WORLDWIDE.COM

WORLD CLASS MANUFACTURERS OF

CONTROLLED BOLTING EQUIPMENT

HTL GROUP

htlgroup.com

HTL BENELUX

htl-benelux.com

HTL WORLDWIDE

htl-worldwide.com

HTL HIRE TORQUE

hiretorque.com

HTL TRAINING SERVICES

htl-trainingservices.com

HTL HYDRA PRESS

htl-hps.com

HTL AUSTRALASIA

htl-australasia.com

Contents

HTL Worldwide

3 HTL 3-in-1 Modular Hydraulic Torque Wrench

5 Low Profile Torque Wrench

7 Ultra-Low Torque Wrench

9 Square Drive Torque Wrench

11 Dedicated Square Drive Torque Wrench

13 Joint Integrity Software

15 No-Flog®

17 Spring Return Tensioners

19 Nut Splitter

21 Power-Pro Hyrdaulic Torque Pumps

23 Power-Pro Hydraulic Tool Pumps

25 Power-Pro Tensioner Pumps

27 Hand Tensioner Pumps

29 Calibration, Test and Training Rigs

31 Lubricants

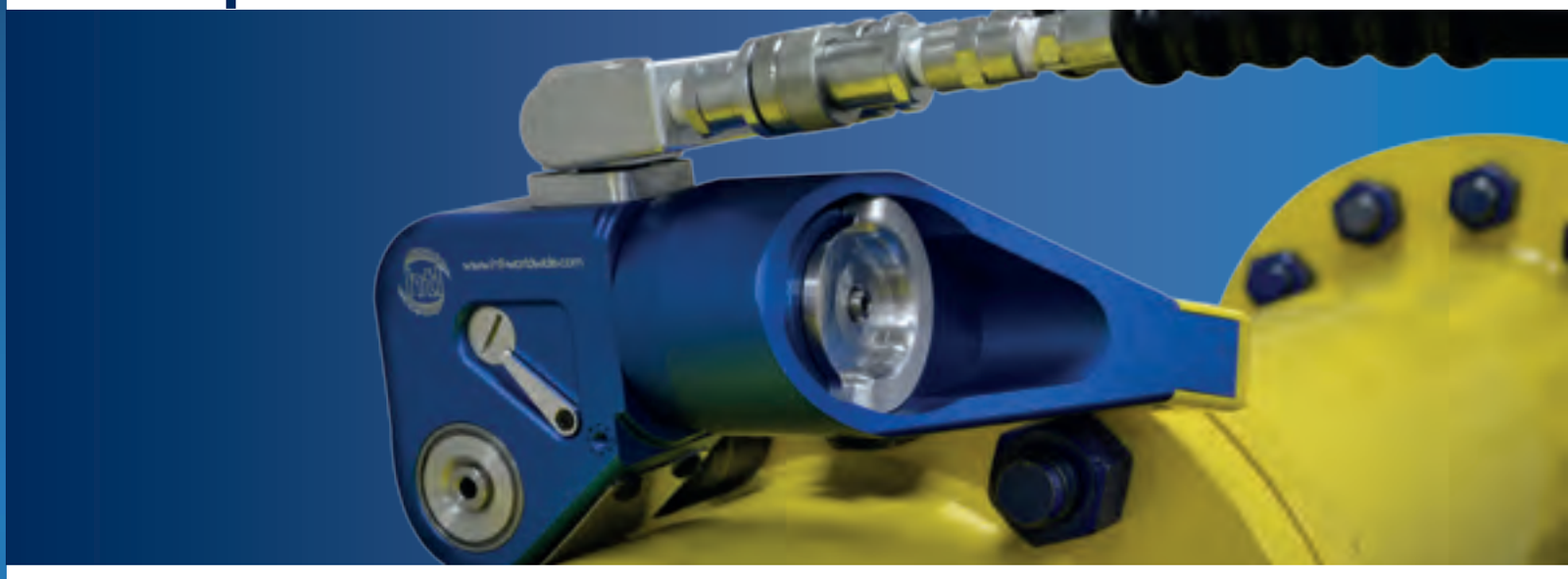

THE MOST VERSATILE 3-IN-1 HYDRAULIC TORQUE WRENCH IN THE WORLD!

INTRODUCING THE HTL LOW PROFILE, HTL ULTRA-LOW AND HTL SQUARE DRIVE

- Unique 3-in-1 design
- 100% British made
- CE and ATEX approved
- Cost effective
- Interchangeable with other manufacturers
- Same day despatch on all standard tool ranges

FOR MORE INFORMATION CONTACT HTL WORLDWIDE TODAY.

FREEPHONE: **08000 832 202**
OUTSIDE UK: **+44 (0) 1670 700 018**
EMAIL: **SALES@HTL-WORLDWIDE.COM**
VISIT: **HTL-WORLDWIDE.COM**

HTL 3-in-1 Hydraulic Torque Wrench

HTL's innovative 3-in-1 Hydraulic Torque Wrench is a modular system made up of a single power head and three link attachments; the Low Profile, Square Drive and Ultra-Low. The HTL 3-in-1 Hydraulic Torque Wrench is able to solve all of your bolting challenges quickly and safely, with one or more of these attachment options, making it suitable for any application.

Extremely durable, this premium tool is made from the highest quality materials and is amongst the most innovative torque tooling designed to date. This ensures that with the use of the HTL 3-in-1, the operator can not only solve their bolting challenges with the various links, but also interchange these with many other well-known brands specifically Hytorc, Rapid-Torc and Wren.

The tool, which is designed and manufactured in the UK, comes with a 12 month warranty and full CE and ATEX approval. Please browse the following pages for further details of the HTL Low Profile, Square Drive and Ultra-low.

The HTL Low Profile

The HTL Low Profile Torque Wrench is part of HTL's innovative 3-in-1 modular Hydraulic Torque Wrench range, and is made up of a combination of the HTL-W power head and the HTL-L low profile link attachment. It is designed to fit most applications, even where clearance is limited, and can produce torque of up to 43,100Nm. Hex sizes are available from $^{3}/_{4}$" to 6 $^{1}/_{8}$" and 19mm to 155mm A/F.

The tool is manufactured and designed in the UK and comes with a 12 month warranty and full CE and ATEX approval. You can find further details of the other tools available in the HTL 3-in-1 range on the neighbouring pages.

Features and Benefits

- Interchangeable with other manufacturers
- No hose kinking using the 360˚ x 180˚ hose swivel links
- Adapt the wrench to suit your application
- Robust design
- Lightweight made from the highest grade aircraft alloy
- Quick link interchangeability
- Only three moving parts for reduced maintenance
- Durable, accurate and flexible
- Ratcheting fine tooth design to avoid tool lock on
- For topside and subsea use
- Calibrated to +/- 3%
- Torque up to 43,100Nm

CE APPROVED

ATEX APPROVED

MADE IN THE UK

12 MONTH WARRANTY

Technical Information

Model		HTL-L2	HTL-L4	HTL-L8	HTL-L14	HTL-L30
Min Torque	lb.ft	255	580	1143	2010	4770
	Nm	346	786	1549	2725	6466
Max Torque	lb.ft	1710	3855	8151	13400	31800
	Nm	2318	5226	11049	18165	43108
Weight	Kg	2.6	5.7	10.5	18.5	42.7
A	mm	183	248	308	372	494
B	mm	19-65	32-80	46-100	50-120	90-155
C	mm	10	12	15	18.5	22
D	mm	31.5	42	52.6	63.4	85
E	mm	45	60	80	90	131
A	Inch	7 13/64	9 49/64	308	12 1/8	19 29/64
B	Inch	3/4" - 2 9/16"	1 5/16" - 3 1/8"	1 13/16" - 3 7/8"	2" - 4 5/8"	3 9/16" - 6 1/8"
C	Inch	25/64	15/32	19/32	47/64	55/64
D	Inch	1 15/64	1 21/32	2 5/64	2 1/2	3 11/32
E	Inch	1 49/64	2 23/64	3 5/32	3 35/64	5 5/32

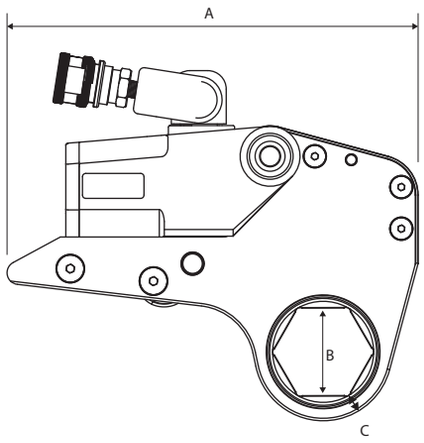

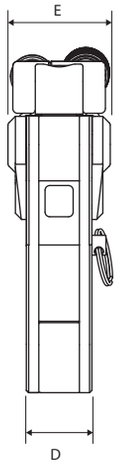

Also available in the 3-in-1 range

The HTL Ultra-Low

The HTL Ultra-Low Torque Wrench is part of HTL's innovative 3-in-1 modular Hydraulic Torque Wrench range. It is made up of a combination of the HTL-W power head and the HTL-R ultra low link attachment. This link is designed specifically to fit even the most confined applications, where standard tools would be unsuitable. With both ring end and open ended hex sizes available from $^{3}/_{4}$" to 4 $^{5}/_{8}$" or 19mm to 120mm A/F the tool is capable of producing a maximum torque of 18,165Nm.

The tool, which is manufactured and designed in the UK, comes with a 12 month warranty and full CE and ATEX approval. You can find further details of the other tools available in HTL 3-in-1 range on the neighbouring pages.

Features and Benefits

- Interchangeable with other manufacturers
- No hose kinking using the 360˚ x 180˚ hose swivel links
- Adapt the wrench to suit your application
- Robust design
- Lightweight made from the highest grade aircraft alloy
- Quick link interchangeability
- Only three moving parts for reduced maintenance
- Durable, accurate and flexible
- For topside and subsea use
- Calibrated to +/- 3%
- Torque up to 18,165 Nm

CE APPROVED

ATEX APPROVED

MADE IN THE UK

12 MONTH WARRANTY

+44 (0) 1670 700 018 SALES@HTL-WORLDWIDE.COM WWW.HTL-WORLDWIDE.COM

Technical Information

Model		HTL-R2	HTL-R4	HTL-R8	HTL-R14
Min Torque	lb.ft	255	580	1143	2010
	Nm	346	786	1549	2725
Max Torque	lb.ft	1710	3855	8151	13400
	Nm	2318	5226	11049	18165
Weight	Kg	2.2	3	3.3	8.2
A	mm	155	208	260	349
B	mm	129	168	209	239
C	mm	66	87	108	132
D	mm	32	42	53	64
E	mm	Dependent on A/F	Dependent on A/F	Dependent on A/F	Dependent on A/F
F	mm	19	25.4	31.75	39
G	mm	7.5	7.5	13	17.5
A/F	mm	19 - 60	36 - 75	55 - 90	80 - 120
A	Inch	6.1	8.1	10.2	13.7
B	Inch	5.1	6.6	8.2	9.4
C	Inch	2.6	3.4	4.3	5.1
D	Inch	1.2	1.7	2.1	2.52
E	Inch	Dependent on A/F	Dependent on A/F	Dependent on A/F	Dependent on A/F
F	Inch	0.7	1	1.25	1.5
G	Inch	0.3	0.3	0.5	0.7

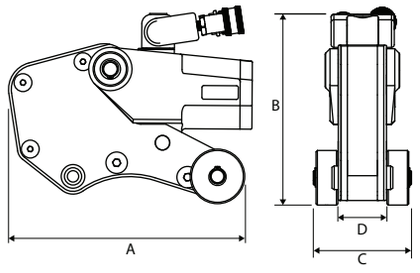

Tool Body

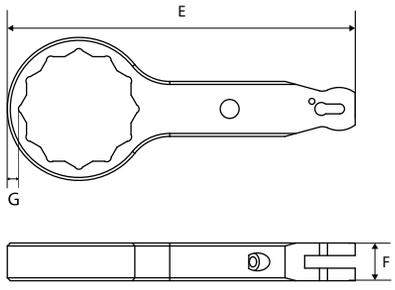

Ring End Spanner

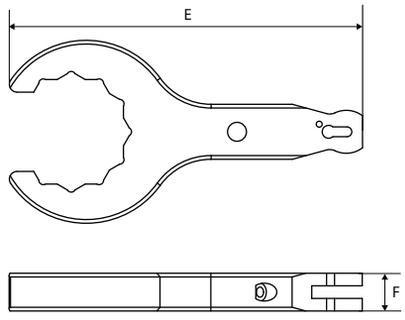

Open End Spanner

Also available in the 3-in-1 range

The HTL Square Drive

The HTL Square Drive Torque Wrench is part of HTL's innovative 3-in-1 modular Hydraulic Torque Wrench range, and is made up of a combination of the HTL-W power head and the HTL-S square drive link attachment which is able to drive a range of impact sockets. This link instantly converts the HTL 3-in-1 system into a standard square drive tool, and is designed to complement the standard range of low profile and roller tool attachments. Square drive sizes are available from $^{3}/_{4}$" to 2 $^{1}/_{2}$" and the wrench can produce torque of up to 43,100Nm.

The tool, which is designed and manufactured in the UK, comes with a 12 month warranty and full CE and ATEX approval. You can find further details of the other tools available in HTL 3-in-1 range on the neighbouring pages.

Features and Benefits

- Interchangeable with other manufacturers
- No hose kinking using the 360˚ x 180˚ hose swivel links
- Adapt the wrench to suit your application
- Robust design
- Lightweight made from the highest grade aircraft alloy
- Quick link interchangeability
- Only three moving parts for reduced maintenance
- Durable, accurate and flexible
- Ratcheting fine tooth design to avoid tool lock on
- For topside and subsea use
- Calibrated to +/- 3%
- Torque up to 43,100Nm

CE APPROVED

ATEX APPROVED

MADE IN THE UK

12 MONTH WARRANTY

Technical Information

Model		HTL-S2	HTL-S4	HTL-S8	HTL-S14	HTL-S30
Square Size	Inch	3/4"	1"	1 1/2"	1 1/2"	2 1/2"
Min Torque	lb.ft	255	580	1143	2010	4770
	Nm	346	786	1549	2725	6466
Max Torque	lb.ft	1710	3855	8151	13400	31800
	Nm	2318	5226	11049	18165	43108
Weight	Kg	2.7	4.1	8.2	13.5	40
A	mm	160	212	267	311	435
B	mm	158	205	254	297	390
C	mm	49.5	65.5	80	99	135
D	mm	30	38.5	50.5	58	88
E	mm	120	158	210	210	390
F	mm	84	110	161	163	244
A	Inch	6.3	212	267	311	435
B	Inch	6.2	8.1	10	11.7	15.4
C	Inch	1.9	2.6	3.1	3.9	5.3
D	Inch	1.2	1.5	2.0	2.3	3.5
E	Inch	4.7	6.2	8.3	8.3	15.3
F	Inch	3.4	4.4	6.4	6.5	9.7

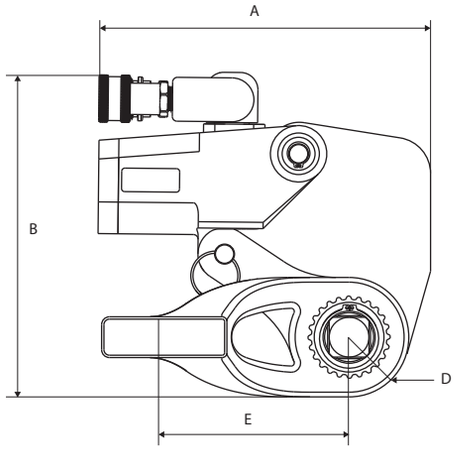

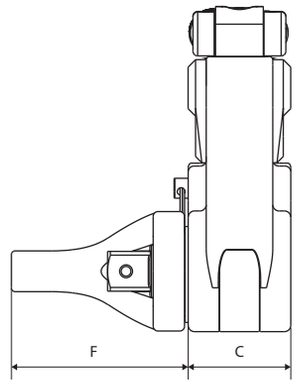

Also available in the 3-in-1 range

The HTL Dedicated Square Drive

The Dedicated Square Drive Torque Wrench has been designed to offer optimum performance levels for both tightening and loosening nuts and bolts. The robust and durable design has been manufactured to deliver extreme versatility and ease of operation and can be used in conjunction with standard impact sockets from ¾" to 2 ½" square drive. A range of direct hex drive adaptors are also available. The range also features a 360 x 180 degree uni-swivel which prevents hose kinking and allows it to be used in highly confined areas. Providing you with the utmost accuracy, the Dedicated Square Drive range is unrivalled due to its lightweight yet resilient design. It truly is the perfect addition to your tool kit!

Features and Benefits

- Models from 200lb.ft to 52,500lb.ft
- $\frac{3}{4}$" to $2\frac{1}{2}$" square drive
- 360° x 180° hydraulic swivel
- 360 degree adjustable reaction arm
- Small nose radius for minimal clearance lightweight
- Aircraft grade aluminium body torque accuracy +/- 3%
- Dual pawl system prevents 'lock on'

CE APPROVED

ATEX APPROVED

MADE IN THE UK

12 MONTH WARRANTY

Technical Information

Model		HTL-DS1	HTL-DS3	HTL-DS5	HTL-DS10	HTL-DS25	HTL-DS50
Square Drive Size		3/4"	1"	1 1/2"	1 1/2"	2 1/2"	2 1/2"
Min Torque	lb.ft	200	480	835	1755	3960	7875
	Nm	271	651	1132	2379	5368	10675
Max Torque	lb.ft	1340	3230	5590	11520	25890	52500
	Nm	1817	4379	7578	15617	35096	71169
Weight	Kg	2	4	8	13	31	48
A	mm	125	163	185	225	282	341
B	mm	180	237	288	357	473	615
C	mm	120	155	185	232	310	390
D	mm	85	115	139	173	229	290
E	mm	50	67	80	100	134	167
F	mm	73	96	126	143	191	228
G	mm	90	120	145	186	234	294
A	Inch	4.9	6.4	7.2	8.9	11.1	13.4
B	Inch	7.0	9.3	11.3	14.1	18.6	24.2
C	Inch	4.7	6.1	7.3	9.1	12.2	15.3
D	Inch	3.3	4.5	5.5	6.8	9.0	11.4
E	Inch	2.0	2.6	3.1	3.9	5.3	6.6
F	Inch	2.3	3.8	5.0	5.6	7.5	9.0
G	Inch	3.5	4.7	5.7	7.3	9.2	11.5

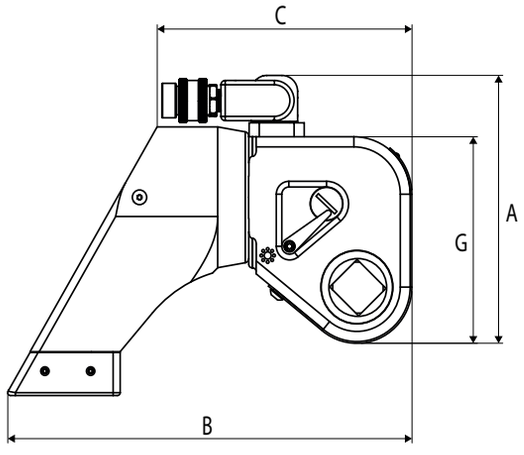

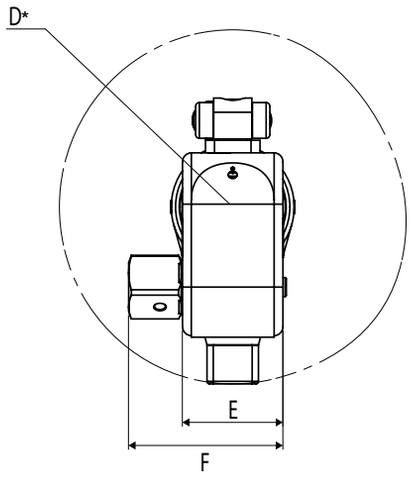

HTL Joint Integrity Software

HTL Worldwide's joint integrity software packages; Bolt-Pro and Joint-Pro are used for the planning, data capture, analysis and reporting of all activities related to the inspection, maintenance and testing of bolted joints saving resource and costs. Bolt-Pro and Joint-Pro are supplied in single computer software packages and are suitable for use in a cross section of industries.

Bolt-Pro - Bolting Calculator

Offering data gathered from years of industry experience, Bolt-Pro can provide bolt tightening data including bolting patterns, torque and tensioning figures, procedures, techniques and recommended controlled bolting equipment. Based on the information entered, the Bolt-Pro software will analyse all of the data and produce a complete calculation sheet along with the required torque or tension figures to ensure an accurate and correctly bolted joint is achieved.

Bolt-Pro can also create a specific tightening procedure for each bolted joint, which can include specific information such as any special remarks all of which can be easily entered into the software by the user. It also includes basic information for standard flanges, wafer check valves, spade and spacers, and swivel flange assemblies.

Joint-Pro - Complete Joint Integrity Management System

Joint-Pro, HTL Worldwide's joint integrity database management system is used to support bolted joint inspection and maintenance and/or leak testing activities raising safety levels across the industry in which it applies.

BOLT-PRO

Features and Benefits:

- An easy to use interface
- Tightening data and bolting patterns, tools and torques for flanged joints
- Torque data and tensioning tool pressures (subsea and topside)
- Bolt extension calculations
- Tightening procedures and torque sequences
- Joint specific recommendations for improved integrity and safety
- Impressive large database of bolt materials and bolt lubricants
- Dimensional data from flanges
- Recommended bolt lengths

JOINT-PRO

Joint-Pro: HTL Worldwide's joint integrity database management system can be used to support bolted joint inspection and maintenance and/or leak testing activities.

Features and Benefits:

- Tagging of flanges and bolts with specifications and bolt torque/tension calculator
- Anomaly and close-out recording
- Leak testing specification
- Configuration to include required service lines and data
- Customisable data capture, reporting and statistical analysis
- Multiple data views
- Integrated PDF mark-up allows for a single system for the visual plan and work packs
- Generation on work packs in a standardised consistent format
- Configuration to meet the exact requirements of end users
- Established database of standards ANSI, API, ISO and flange information
- Ability to import tools, gaskets and joint types

No-Flog®

This unique tool can be used to stop back nuts turning during the make up or break out of bolted flanges and joints up to 6 $^{1}/_{8}$" A/F. Each tool covers two bolt sizes in one and is quickly and easily fitted and removed. The No-Flog® is spark free and unlike traditional flogging spanners, has been designed to avoid locking onto the application during bolt torquing operations. This self-supporting and hands free tool will save you time and money through speeding up the bolting process, whilst improving safety. HTL's No-Flog® range is available in sizes from 1 $^{1}/_{16}$" A/F (27mm A/F) up to 6 $^{1}/_{8}$" A/F (155mm A/F), however non standard customer requirements can also be met.

Features and Benefits

- Hands free
- Made in the UK
- Supplied with a tether as standard
- Won't lock on
- 2 sizes in 1
- Spark free
- No flogging hammer required
- Intrinsically safe
- Fitted in seconds and removed instantly
- Saves time and money
- Available to purchase as a kit or singularly
- No trapped fingers

CE APPROVED

ATEX APPROVED

MADE IN THE UK

12 MONTH WARRANTY

Metric

Size		NF-2732	NF-3641	NF-4650	NF-5560	NF-6065	NF-6570	NF-7580	NF-8590	NF-95100	NF-105110	NF-115120
Small A/F	mm	27	36	46	55	60	65	75	85	95	105	115
Large A/F	mm	32	41	50	60	65	70	80	90	100	110	120
A	mm	7.5	7.5	7.5	7.5	7.5	7.5	7.5	10	10	12	14
B	mm	98	117	138	158	169	180	206	233	254	285	310
C	mm	18	24	25	29	29	32.5	35	40	40	42.5	50
A	Inch	0.30	0.30	0.30	0.30	0.30	0.30	0.30	0.39	0.39	0.47	0.55
B	Inch	3.86	4.62	5.42	6.23	6.65	7.08	8.12	9.17	10.02	11.22	12.22
C	Inch	.071	0.94	0.98	1.14	1.14	1.28	1.38	1.57	1.57	1.67	1.97

Imperial

Size		NF-1116114	NF-1716158	NF-113162	NF-2316238	NF-2916234	NF-21516318	NF-312378	NF-414458	NF-5538
Small A/F	Inch	1 1/16"	1 7/16"	1 13/16"	2 3/16"	2 9/16"	2 15/16"	3 1/2"	4 1/4"	5"
Large A/F	Inch	1 1/4"	1 5/8"	2"	2 3/8"	2 3/4"	3 1/8"	3 7/8"	4 5/8"	5 3/8"
A	mm	7.5	7.5	7.5	7.5	7.5	7.5	11	10	13
B	mm	98	119	138	160	180	201	249	293	354
C	mm	18	20	25	29	32.5	35	40	45	50
A	Inch	0.30	0.30	0.30	0.30	0.30	0.30	0.43	0.39	0.51
B	Inch	3.84	4.67	5.44	6.30	7.11	7.92	9.81	11.55	13.92
C	Inch	0.71	0.79	0.98	1.14	1.28	1.38	1.57	1.77	1.97

*Larger sizes available on request

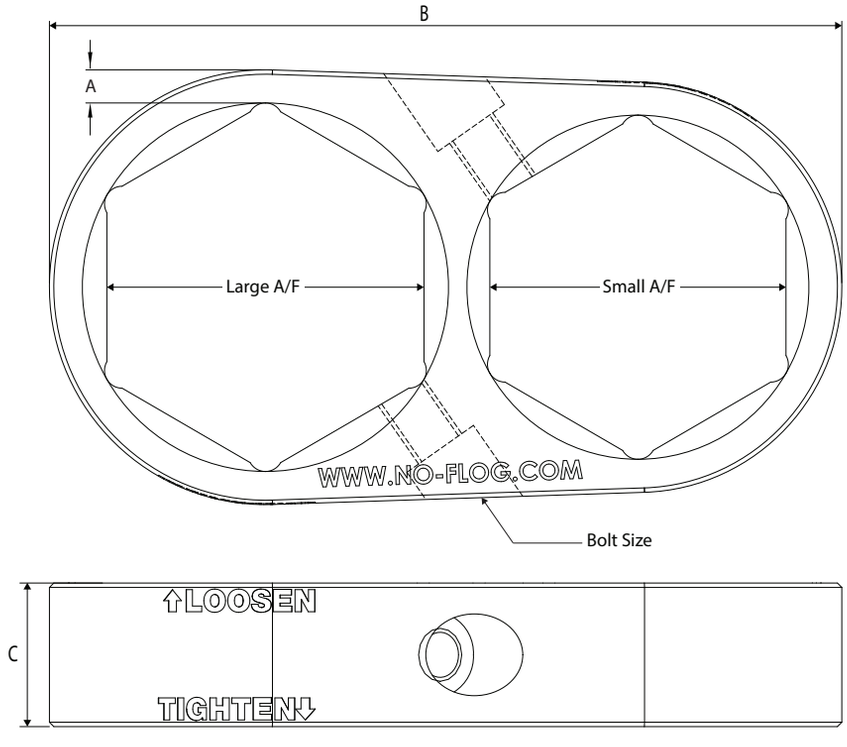

HTL Spring Return Tensioners

The range of Spring Return Tensioners have been designed to ultimately increase and improve the productivity and safety of the operator. The spring return design enables automatic piston retraction at the end of the tensioning sequence, ensuring the tools are prepared and ready for the next cycle.

In comparison to traditionally designed tensioners, the HTL range of Spring Return Tensioners allows for efficient and ease of use through enhanced design which includes an anti-slip tool surface to improve grip. The design also incorporates a dual port which allows the operator to daisy chain multiple tensioners together, removing the need and expense of 'T' pieces.

All models within the range have a stroke of 10mm and cover ranges from $^{3}/_{4}$" – 4" bolts making them suitable for use on a vast range of flange sizes. All models within the range offer both metric and imperial inserts as well as oversized versions for galvanized studs.

Features and Benefits

- Piston stroke - 10mm
- Max tool pressure - 21,750 psi (1,500 bar)
- Bolt protrusion above nut = 1 x bolt diameter
- Weight excludes puller sleeve

CE APPROVED

ATEX APPROVED

MADE IN THE UK

12 MONTH WARRANTY

+44 (0) 1670 700 018 SALES@HTL-WORLDWIDE.COM WWW.HTL-WORLDWIDE.COM

Technical Information

Model	Stud Diameter		Tool Load		Hydraulic Area		A	B	C	D		Weight
	Imperial	Metric	Ton/Ft	KN	in^2	mm^2	mm	mm	mm	Imperial Bolts	Metric Bolts	Kg
HTL-ST1	1”	M24	28.1	280	2.89	1867	87	117	68	175	178	2.7
	1 1/8”	M27	28.1	280	2.89	1867	87	120	72	175	181	2.7
HTL-ST2	1”	M24	45.2	450	4.65	3001	103	117	75	175	175	4.1
	1 1/8”	M27	45.2	450	4.65	3001	103	117	75	181	178	4.1
	1 1/4”	M30	45.2	45W0	4.65	3001	103	120	80	188	184	4.1
	1 3/8”	M33	45.2	450	4.65	3001	103	123	84	195	190	4.1
	-	M36	45.2	450	4.65	3001	103	126	89	195	196	4.1
HTL-ST3	1 1/4 ”	M33	66.2	660	6.82	4401	118	123	88	190	192	5.4
	1 3/8”	M36	66.2	660	6.82	4401	118	126	96	197	198	5.4
	1 1/2”	M39	66.2	660	6.82	4401	118	130	96	203	204	5.4
	1 5/8”	M42	66.2	660	6.82	4401	118	133	105	209	211	5.4
HTL-ST4	1 1/2 ”	M39	101.4	1000	10.34	6668	140.5	132	112	211	212	8.4
	1 5/8”	M42	101.4	1000	10.34	6668	140.5	135	114	217	218	8.4
	1 3/4”	M45	101.4	1000	10.34	6668	140.5	139	118	223	225	8.4
	1 7/8”	M48	101.4	1000	10.34	6668	140.5	142	114	230	225	8.4
	2”	M48	101.4	1000	10.34	6668	140.5	145	120	236	231	8.4
HTL-ST5	2”	M52	150.5	1500	15.50	10003	175.5	148	120	246	248	13.8
	2 1/4”	M56	150.5	1500	15.50	10003	175.5	154	138	259	258	13.8
	2 1/2”	M60	150.5	1500	15.50	10003	175.5	161	138	259	262	13.8
	2 3/4”	M64	150.5	1500	15.50	10003	175.5	161	153	272	273	13.8
	-	M68	150.5	1500	15.50	10003	175.5	167	156	284	283	13.8
HTL-ST6	2 3/4”	M72	250.9	2500	25.84	16671	219	167	157	294	297	23.0
	3”	M76	250.9	2500	25.84	16671	219	171	182	307	308	23.0
	3 1/4”	M80	250.9	2500	25.84	16671	219	180	190	320	312	23.0
	3 1/2”	M85	250.9	2500	25.84	16671	219	180	190	332	323	23.0
	-	M90	250.9	2500	25.84	16671	219	186	205	332	334	23.0
HTL-ST7	3 1/2”	M90	321.2	3200	33.06	21339	252	186	200	339	341	32.0
	3 3/4”	M95	321.2	3200	33.06	21339	252	186	200	352	346	32.0
	4”	M100	321.2	3200	33.06	21339	252	192	200	364	356	32.0
	-	M100	321.2	3200	33.06	21339	252	199	210	364	356	32.0

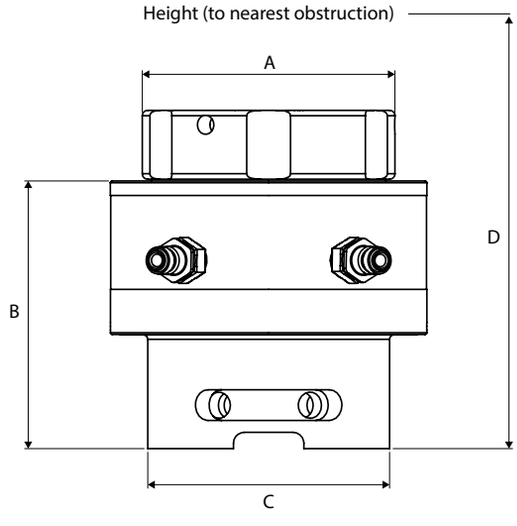

HTL Hydraulic Nut Splitters

The HTL range of Nut Splitters are the ideal tool for removing corroded and seized nuts. The design incorporates a single acting spring return, and eliminates the need for grinding or flame cutting and associated safety issues. The heavy duty blades can be easily removed and are triple edged giving extra longevity.

Features and Benefits

- Designed to fit standard BS/ANSI flanges
- Intrinsically safe
- Made in the UK
- Triple edge exchangeable cutting blade
- Blade positioning scale to eliminate bolt damage
- Adjustable cutting depth achieved by rotating the cylinder
- Sizes range from ¾" – 3 ½" bolt diameters
- Ergonomically designed and positioned handle
- Single acting spring return cylinder

CE APPROVED

ATEX APPROVED

MADE IN THE UK

12 MONTH WARRANTY

Technical Information

Model	Bolt Diameter (Metric and Imperial)				A		B		C		D		E		F		G		Weight
	Bolt	A/F	Bolt	A/F	mm	Inch	mm	Inch	mm	Inch	mm	Inch	mm	Inch	mm	Inch	mm	Inch	Kg
	3/4	1 1/4	M20	30	104	4.1	228	9.0	76	3.0	18	0.7	104	4.1	41	1.6	9	0.3	6.7
	7/8	1 7/16	M22	32	104	4.1	228	9.0	76	3.0	18	0.7	104	4.1	41	1.6	9	0.3	6.7
HTL-NS1-1	1	1 5/8	M24	36	104	4.1	228	9.0	76	3.0	18	0.7	104	4.1	41	1.6	9	0.3	6.7
	-	-	M27	41	104	4.1	228	9.0	76	3.0	18	0.7	104	4.1	41	1.6	9	0.3	6.7
	3/4	1 1/4	M20	30	104	4.1	228	9.0	90	3.0	21	0.8	111	4.3	41	1.6	10	0.4	6.9
	7/8	1 7/16	M22	32	104	4.1	228	9.0	90	3.0	21	0.8	111	4.3	41	1.6	10	0.4	6.9
	1	1 5/8	M24	36	104	4.1	228	9.0	90	3.0	21	0.8	111	4.3	41	1.6	10	0.4	6.9
	1 1/8	1 13/16	M27	41	104	4.1	228	9.0	90	3.0	21	0.8	111	4.3	41	1.6	10	0.4	6.9
HTL-NS1-2	-	-	M30	50	104	4.1	228	9.0	90	3.0	21	0.8	111	4.3	41	1.6	10	0.4	6.9
	-	-	M33	50	104	4.1	228	9.0	90	3.0	21	0.8	111	4.3	41	1.6	10	0.4	6.9
	1 1/8	1 13/16	M30	46	138	5.4	305	12.0	102	4.0	22	0.9	132	5.2	58	2.3	6	0.2	16
	1 1/4	2	M33	50	138	5.4	305	12.0	102	4.0	22	0.9	132	5.2	58	2.3	6	0.2	16
HTL-NS2-1	1 3/8	2 3/16	M36	55	138	5.4	305	12.0	102	4.0	22	0.9	132	5.2	58	2.3	6	0.2	16
	1 1/2	2 3/8	M39	60	138	5.4	305	12.0	102	4.0	22	0.9	132	5.2	58	2.3	6	0.2	16
	1 1/8	1 13/16	M30	46	138	5.4	314	12.4	114	4.5	23	0.9	141	5.6	58	2.3	6	0.2	16
	1 1/4	2	M33	50	138	5.4	314	12.4	114	4.5	23	0.9	141	5.6	58	2.3	6	0.2	16
	1 3/8	2 3/16	M36	55	138	5.4	314	12.4	114	4.5	23	0.9	141	5.6	58	2.3	6	0.2	16
	1 1/2	2 3/8	M39	60	138	5.4	314	12.4	114	4.5	23	0.9	141	5.6	58	2.3	6	0.2	16
HTL-NS2-2	1 5/8	2 9/16	M42	65	138	5.4	314	12.4	114	4.5	23	0.9	141	5.6	58	2.3	6	0.2	16
	1 3/4	2 3/4	M45	70	138	5.4	314	12.4	114	4.5	23	0.9	141	5.6	58	2.3	6	0.2	16
	1 3/4	2 3/4	M45	70	190	7.5	406	15.9	132	5.2	28	1.1	189	7.4	81	3.1	8	0.31	42
HTL-NS3-1	1 7/8	2 15/16	M48	75	190	7.5	406	15.9	132	5.2	28	1.1	189	7.4	81	3.1	8	0.31	42
	2	3 1/8	M52	80	190	7.5	406	15.9	132	5.2	28	1.1	189	7.4	81	3.1	8	0.31	42
	1 3/4	2 3/4	M45	70	190	7.5	416	416	145	145	30	30	190	19	81	81	8	0.3	43
	1 7/8	2 15/16	M48	75	190	7.5	416	416	145	145	30	30	190	19	81	81	8	0.3	43
HTL-NS3-2	2	3 1/8	M52	80	190	7.5	416	416	145	145	30	30	190	19	81	81	8	0.3	43
	2 1/4	3 1/2	M56	85	190	7.5	416	416	145	145	30	30	190	19	81	81	8	0.3	43
	1 3/4	2 3/4	M45	70	190	7.5	426	17.0	160	6.3	32	1.3	200	7.9	81	3.1	7	0.3	43
	1 7/8	2 15/16	M48	75	190	7.5	426	17.0	160	6.3	32	1.3	200	7.9	81	3.1	7	0.3	43
	2	3 1/8	M52	80	190	7.5	426	17.0	160	6.3	32	1.3	200	7.9	81	3.1	7	0.3	43
	2 1/4	3 1/2	M56	85	190	7.5	426	17.0	160	6.3	32	1.3	200	7.9	81	3.1	7	0.3	43
HTL-NS3-3	2 1/2	3 7/8	M60	90	190	7.5	426	17.0	160	6.8	32	1.3	200	7.9	81	3.1	7	0.3	43
	-	-	M64	95	190	7.5	426	17.0	160	6.8	32	1.3	200	7.9	81	3.1	7	0.3	43
	1 3/4	2 3/4	M45	70	190	7.5	437	17.0	174	6.8	35	1.4	204	8.0	81	3.2	9	0.35	44
	1 7/8	2 15/16	M48	75	190	7.5	437	17.0	174	6.8	35	1.4	204	8.0	81	3.2	9	0.35	44
	2	3 1/8	M52	80	190	7.5	437	17.0	174	6.8	35	1.4	204	8.0	81	3.2	9	0.35	44
	2 1/4	3 1/2	M56	85	190	7.5	437	17.0	174	6.8	35	1.4	204	8.0	81	3.2	9	0.35	44
HTL-NS3-4	2 1/2	3 7/8	M64	95	190	7.5	437	17.0	174	6.8	35	1.4	204	8.0	81	3.2	9	0.35	44
	2 3/4	4 1/4	M70	100	190	7.5	437	17.0	174	6.8	35	1.4	204	8.0	81	4.3	9	0.2	44
HTL-NS4-1	2 3/4	4 1/4	M76	110	235	9.3	474	18.6	189	7.4	37	1.5	235	9.3	111	4.3	4	0.2	73
	3	4 5/8	M80	115	235	9.3	474	18.6	189	7.4	37	1.5	235	9.3	111	4.3	4	0.2	73
	2 3/4	4 1/4	M76	110	235	9.3	495	19.5	219	8.6	41	1.6	240	9.4	110	4.3	3	0.1	75
	3	4 5/8	M80	115	235	9.3	495	19.5	219	8.6	41	1.6	240	9.4	110	4.3	3	0.1	75
HTL-NS4-2	3 1/4	5	M85	125	235	9.3	495	19.5	219	8.6	41	1.6	240	9.4	110	4.3	3	0.1	75
	3 1/2	5 3/8	M90	130	235	9.3	495	19.5	219	8.6	41	1.6	240	9.4	110	4.3	3	0.1	75

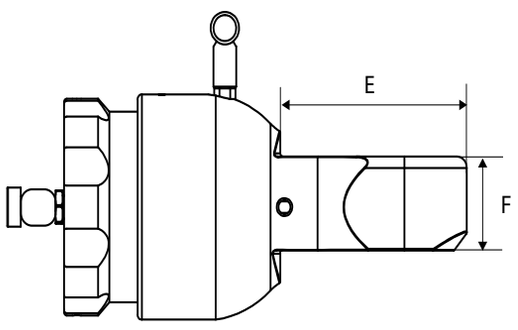

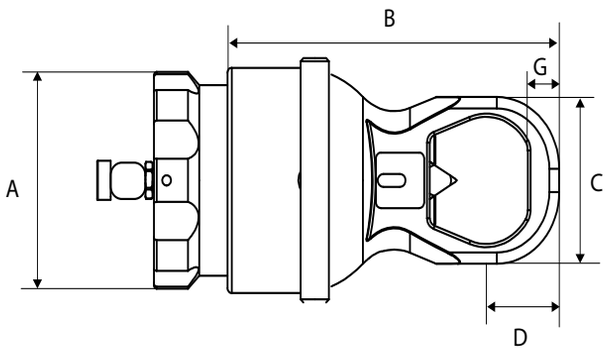

HTL Power-Pro Torque Pumps

The HTL Worldwide Power-Pro Hydraulic Torque Pump is available with a multi-tool manifold (as pictured) allowing up to four tools to be used simultaneously ensuring equal, parallel closure of flanges; alternatively the pump can be delivered with a single tool manifold. The pump incorporates a compact solenoid valve system which ensures reliability whilst remaining light weight and portable. The highly ergonomic design ensures ease of use for the operator; ultimately increasing performance.

Features and Benefits

- Multi-tool manifold as standard
- Solenoid valve system
- Protective frame design
- Robust hand control
- Precision, calibrated pressure gauge
- Oil level sight glass

Whats Included...

Each pump despatched is ready to use and complete with:

- Full calibration certificate
- Letter of Conformity
- Spare parts list
- Operating instructions
- HTL Worldwide Pro-46 Hydraulic Oil
- Twin line hose assembly (custom lengths available)

Twin Line Hoses

Twin line hoses are available in all lengths to specifically suit your needs.

Technical Information

Model	Power Type	Weight	Reservoir		Power Required	A		B		C	
		Kg	Litres	Gallons		mm	Inch	mm	Inch	mm	Inch
Power-Pro Air	Air	32	9	2	50 CFM	408	16.1	298	11.7	531	20.1
Power-Pro 110	Electric	32	9	2	110v	439	17.3	298	11.7	564	20.1
Power-Pro 220	Electric	35	9	2	230v	439	17.3	298	11.753	564	20.1

Power-Pro Air

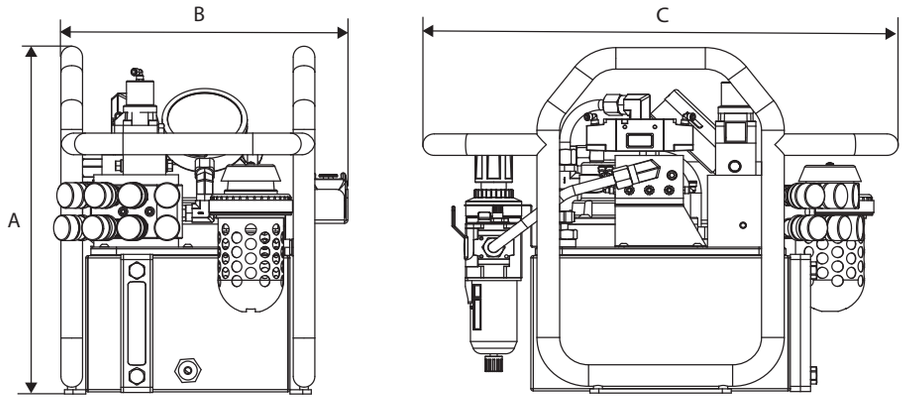

Power-Pro Electric

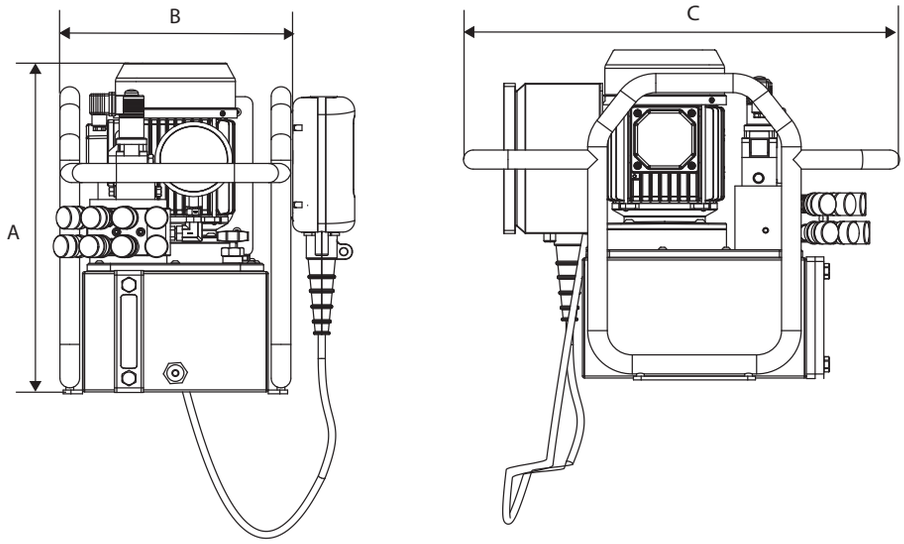

HTL Power-Pro Hydraulic Tool Pumps

The HTL Power-Pro Hydraulic Tool Pump provides the ideal solution to power both single and double acting hydraulic tools, for example nut splitters, flange spreaders, lifting cylinders and endless other applications.

The compact, yet powerful design along with the manual valve allows full operator control of any single or double acting tool. Each pump unit comes complete with a robust, compact and operator friendly protective carrying frame for ease of use.

Features and Benefits

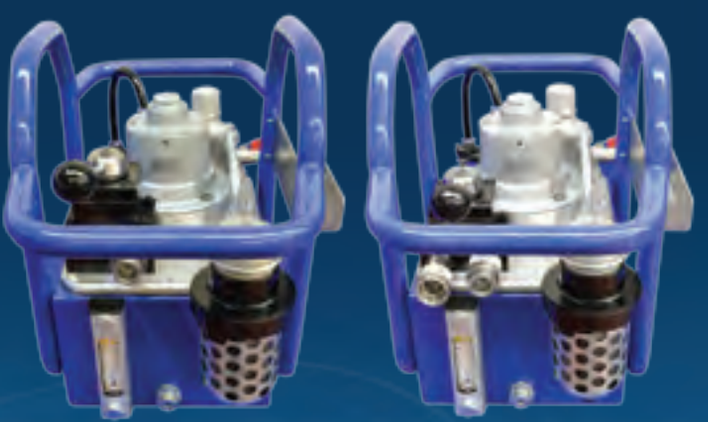

- Single or double acting tool use available
- Remote hand control available for all pumps
- Protective carry frame
- Oil level sight glass
- Hose assemblies available to suit your requirements

Whats Included...

Each pump is despatched containing all items to ensure immediate use.

- Full calibration certificate
- Letter of Conformity
- Spare parts list
- Operating instructions
- HTL Worldwide Pro-46 Hydraulic Oil
- Twin line hose assembly (custom lengths available)

Technical Information

Model	Power Type	Weight	Reservoir		Frame	Power Required	A		B		C	
		Kg	Litres	Gallons			mm	Inch	mm	Inch	mm	Inch
Single Air	Air	32	9	2	Yes	50 CFM	474	18.6	352	13.9	560	22.0
Single Electric 110	110v	32	9	2	Yes	110v	465	18.3	352	13.9	650	22.0
Single Electric 240	240v	32	9	2	Yes	240v	455	18.3	352	13.9	650	22.0
Double Air	Air	32	9	2	Yes	50 CFM	474	18.6	352	13.9	560	22.0
Double Electric 110	110v	32	9	2	Yes	110v	465	18.3	352	13.9	650	22.0
Double Electric 240	240v	32	9	2	Yes	240v	455	18.3	352	13.9	650	22.0

Power-Pro Air

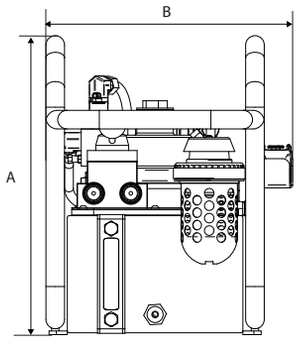

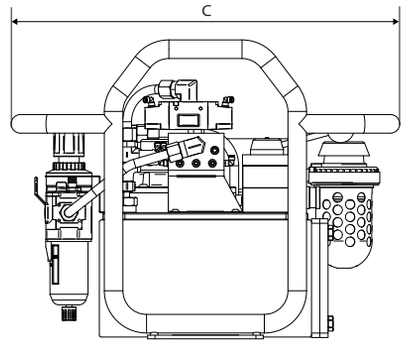

Power-Pro Electric

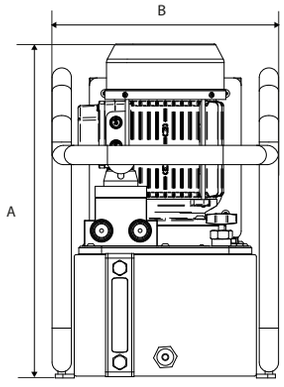

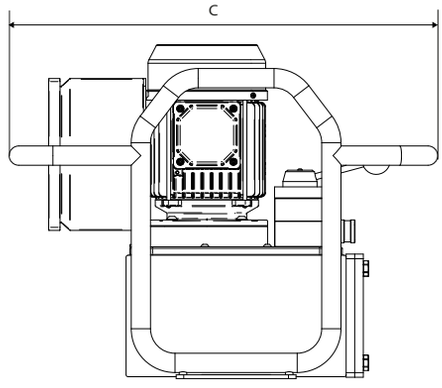

HTL Power-Pro Tensioner Pumps

The air operated Tensioner Pump has been designed and constructed within a stainless steel frame to avoid corrosion in the harshest of environments and has been designed to be failsafe, user friendly, lightweight and compact. The unit works on a simple but efficient principle, building pressure magnified through differential piston sizes.

A large piston drives a smaller hydraulic piston, which provides flow at high pressure. For additional efficiency, all the usable components are ergonomoically positioned, with an easy to read gauge located on the side of the pump.

Features and Benefits

- Hydraulic pressure is held without energy consumption
- Made in the UK
- Explosion proof, requires no electrical power
- Intrinsically safe
- Compact and lightweight
- Contamination tolerant
- Outlet stall pressure predetermined by the air drive regulator
- Ideal for stop start applications under full load
- Easy to install and operate

Technical Information

Model	Max Working Pressure		Flow Rate	Air Consumption	Reservoir		Height		Length		Width		Weight
	Bar	psi	Litres/Min	Litres/Min	Litres	Gallons	mm	Inch	mm	Inch	mm	Inch	Kg
STANDARD	1500	21,750	0.72	800	9.5	2.1	410	16.1	470	18.5	420	16.5	19
HIGH FLOW	1500	21,750	1.14	1600	9.5	2.1	410	16.1	470	18.5	420	16.5	23

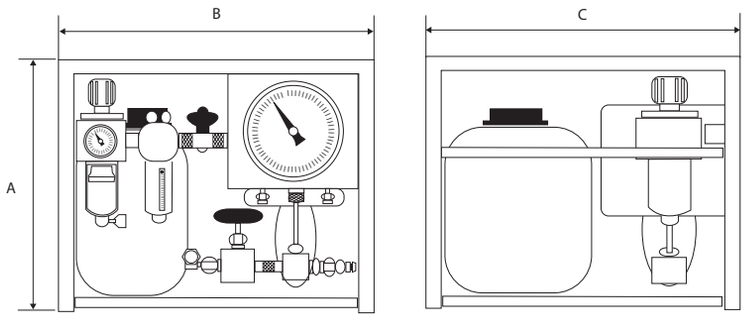

Tensioner Hoses

To complement our range of Bolt Tensioners HTL offer hose reels which are ideally suited but not limited to subsea use. Our hose reels come complete with a suitable high pressure coupler, brake mechanism and lock off facility. Typically each reel carries 210m of single line tensioner hose however custom length reels are also available. Contact us to discuss your specific requirements.

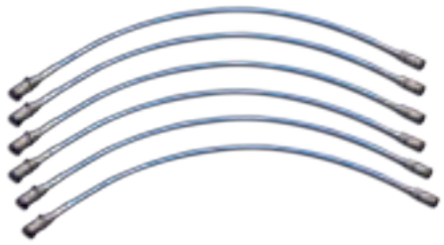

HTL Hand Tensioner Pumps

The Hand Tensioner Pump is designed for those applications where there is no power available. These lightweight hand tensioner pumps are safe, low maintenance and durable meeting onsite bolt tensioning challenges. They are easy to operate and are supplied complete with a calibrated pressure gauge and quick release outlet coupling. The lightweight and portable design makes this the ideal pump for when you're on the move.

Features and Benefits

- Needle release valve - offers full pressure relief control
- Made in the UK
- Aluminium tank
- Low weight & maintenance friendly
- Easy to refill oil and with optional overflow valve
- Integral pressure gauge

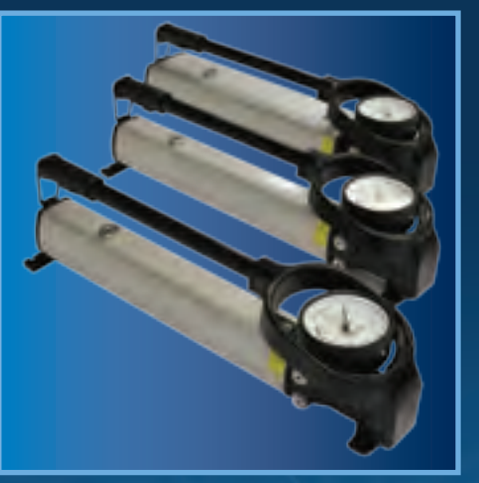

Technical Information

Reservoir	Max Working Pressure		Pump Stroke Low Pressure		Pump Stroke High Pressure		A		B		C		Weight
	bar	psi	mm	Inch	mm	Inch	mm	Inch	mm	Inch	mm	Inch	Kg
1.0	2500	21750	200	1.2	10	0.1	620	24.4	170	6.5	130	6.4	8.3
2.4	2500	21750	200	1.2	10	0.1	620	24.4	170	6.5	130	6.4	10.1

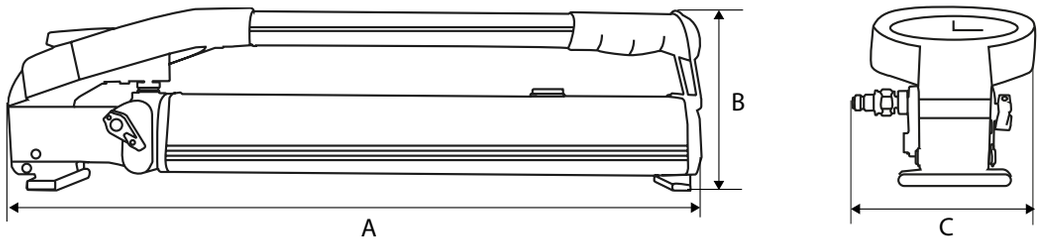

Calibration, Test and Training Rigs

HTL Worldwide manufacture a range of calibration, test and training rigs based upon a proven standard base design with a bespoke feel. Using the highest standards of design and manufacture with a range of options and safety features they allow calibration and test of a range of bolting equipment as well as training your operators to recognised industry standards.

Hydraulic Torque Tool Calibration Rig

This rig can be provided with a range of transducers to meet specific requirements as follows: 5000lb.ft (6779Nm), 25000lb. ft (33895Nm) and 50000lb.ft (67790Nm). Pump pressure and tool output are recorded on a 10" 10000 psi gauge and a digital T box readout cleverly incorporated into the design. Transducers have either 1.$^{1}/_{2}$" (5000) or 2. $^{1}/_{2}$" (25000 & 50000) square drives and a range of square drive adaptors are available to cover a desired range of tools. For low clearance tool ranges of both metric and imperial, hex adaptors can also be purchased as optional extras. The rig comes with a useful storage shelf for the adaptors and a neat cupboard to house the power pack. Safety interlocks ensure the protective gas strut assisted Polycarbonate lid cannot be opened during operation. Finished in a durable blue powder coating the rig has floor mounting feet with lockable casters (optional).

CE APPROVED

ATEX APPROVED

MADE IN THE UK

12 MONTH WARRANTY

Hand Torque Tool Calibration Rig

This simple but effective stand alone or bench mounted rig allows you to quickly and accurately calibrate hand torque wrenches up to 1106lb.ft (1500Nm). Complete with durable blue powder coated framework and digital readout.

Gauge Calibration Rig

This cabinet enclosed rig allows the user to pressure test pneumatic gauges up to 300 psi and hydraulic gauges up to 40000 psi. Housed in a durable blue powder coated body with perspex interlocked safety cover the rig includes a digital readout and dedicated hand pump for accurate interval calibration if required.

Tensioner Test Rig

Housed in the same base as the Torque Tool Calibration Unit the Tensioner Test Rig allows the user to pressure test bolt tensioners to ensure their integrity. The same durable blue powder coated finish and safety interlocks are included. The unit can be enhanced to give tensioner load readings by adding 80t and/or 400t load cells complete with digital read out. Full or partial sets of metric and/or imperial studs are available as an optional extra.

Hose Test Rig

This cabinet enclosed rig allows the user to pressure test single and twin line hydraulic hoses up to 40000 psi. Housed in a durable blue powder coated body with perspex interlocked safety cover the rig includes a gauge and dedicated hand pump.

Training Rig

This rig is designed and built to ECITB specifications and has a range of flanges mounted upon it to allow effective training on the use of hand torque wrenches, hydraulic torque wrenches and bolt tensioners. Finished in a durable blue powder coating the unit has lifting points and fork truck shoes to enable it to be moved and shipped to various locations if required. Lockable casters allow for safe and easy transportation.

Gauge Calibration Rig

Tensioner Test Rig

Training Rig

HTL
LUBRICANTS

PRO-MOLY

The Smart Bolting Lubricant - Coefficient of friction: 0.10

Pro-Moly is a metal-free, lithium based, anti-seize lubricant that safeguards against corrosion whilst offering enhanced load carrying performance and wear protection. Pro-Moly is ideally suited for the assembly and fitting of a wide range of threaded connections such as bolted connections.

It offers a wide service temperature range and low, constant coefficient of friction ensuring that tightening torques can be calculated and applied accurately. This smart lubricant is durable, reliable, water resistant and versatile making it the number one choice for bolting lubricant.

PRO-COPPER

The High Performance Bolting Lubricant - Coefficient of friction: 0.11

Pro-Copper is a high temperature, anti-seize compound used to prevent seizure and galling during assembly even in the harshest pressure and temperature environments. It protects against rust, oxidisation and chemical attack. The unique combination of properties in Pro-Copper allows for the quick and easy assembly of threaded parts which also allows for accurate torque to be applied by reducing thread interference.

Pro-Copper is suitable as an anti-seize lubricant for a wide range of aggressive conditions. It also reduces wear in areas of high friction resulting in the easy breakout of threads, gaskets and packings. As a result of its seizure protection qualities, work requiring routine or infrequent maintenance can be less time consuming, saving resources.

PRO-COMPLEX

Multipurpose Grease

Pro-Complex is a lithium complex thickened blue coloured grease that has been developed as a multipurpose product recommended for use on industrial equipment where high temperatures are a challenge. Pro-complex out performs conventional lithium greases due to its exceptional mechanical stability to extend relubrication intervals and has excellent oxidation stability providing lasting lubrication in harsh high temperature environments.

This multipurpose grease offers first rate mechanical wear resistance ensuring durability and reliability. It also has exceptional sealing properties which help protect bearings against corrosive atmospheres and it has a high degree of water tolerance when operating in wet conditions.

PRO-46

Hydraulic Oil

HTL's Pro - 46 Hydraulic Oil is a premium quality, high performance blue hydraulic oil designed to be used in HTL's range of Hydraulic Torque and Tensioner Pumps. By incorporating a carefully selected additive package which provides excellent anti-wear and extreme pressure properties as well as impressive thermal stability and corrosion protection, this product performs across a wide temperature range. Its exceptional anti-wear, lubricity and film strength characteristics guarantees performance in hydraulic and circulation systems even in severe conditions.

ECITB

ACCREDITED TRAINING

Here at HTL Training Services, we provide businesses with the means to train the engineers of today for tomorrow to the highest standards with our highly qualified instructors. Our courses range from Mechanical Joint Integrity of Bolted Flanges to other mechanical courses such as Hydraulics, Bearings Analysis and Abrasive Wheels. See our comprehensive list of courses for more detailed information.

The Engineering Construction Industry Training Board (ECITB) is the UK based statutory organisation, national training provider and awarding body with responsibility for the training and development. Acting on behalf of the industry, the ECITB works closely with UK government and global employers to attract, develop and qualify engineering construction personnel in hundreds of skills and disciplines.

COURSES

ECITB Mechanical Joint Integrity

HTL are a leader in bolt working training courses. Our courses can be taken as individual courses or as a 2 $^{1}/_{2}$ day course covering all three elements. Training with HTL couldn't be easier as we can deliver this course globally. Further bespoke modules to suit specific needs are also available.

MJI10 Hand Torque Bolted Connection Techniques

This course covers specifications, methods, processes, techniques and procedures for using hand torque wrenches. It will explain how to remove components from hand torque bolted connection systems, how to replace and reassemble securely and verify the integrity of assembled joints.

MJI10/19 Hand & Hydraulic Torque Bolted Connections

This course covers specifications, methods, processes, techniques and procedures for using hand and hydraulic torque wrenches. It will explain how to remove components from hand and hydraulic torque bolted connection systems, how to replace and reassemble securely and verify the integrity of assembled joints.

MJI18 Hydraulically Tensioned Bolted Connection Techniques

This course covers specifications, methods, processes, techniques and procedures for using hydraulic tensioning equipment. It will explain how to remove components from hydraulic tensioning bolted connection systems, how to replace and reassemble securely and verify the integrity of assembled joints.

CONTACT HTL TODAY TO BOOK YOUR PLACE

T : +44 (0)1670 700 000
E : info@htl-trainingservices.com
W : www.htl-trainingservices.com

ISO 9001 Registered Quality Management
ISO 14001 Registered Environmental Management
OHSAS 18001 Registered Health & Safety Management

ECITB Engineering Construction Industry Training Board APPROVED PROVIDER

UVDB empowered by Achilles

ECITB

Engineering Construction Industry Training Board

APPROVED PROVIDER

WORLD CLASS MANUFACTURERS OF

CONTROLLED BOLTING EQUIPMENT

HTL Worldwide Ltd
45 Colbourne Avenue,
Nelson Park Industrial Estate,
Cramlington, Northumberland, UK
NE23 1WD UK

Telephone : +44 (0) 1670 700 018

Email : sales@htl-worldwide.com

Visit : www.htl-worldwide.com

MA/WW/25/1.1