# MV Series

## HIGH PERFORMANCE HIGH RIGIDITY VERTICAL MACHINING CENTER

IT'S VERY WELL MADE IN TAIWAN
ISO 9001 BSMI REGISTERED
ISO 14001 BSMI REGISTERED
CE

YCM®

# YCM MV Series

- The YCM MV Series Vertical Machining Center is the latest developed machine tool for efficient production industries; widely adopted in automobile, aerospace, electronic and precision molds & dies; especial its large Y-axis travel design accommodates most molds & dies applications.
- The MV Series takes the high quality and strengthened MEEHANITE® castings, state-of-the-art scraper works on axial alignments ensure the best support and accuracy. This is also the most durable machine tool for its casting integrated construction.
- The axial movements are in direct transmission configuration with the best force flow performance; pretension ballscrews and the Z-axis guide-bar counter weight (on the MV86A/MV106A) all ensure the accuracy in rapid movement. Various spindle modules for different application requirements, reliable ATC unit, eco-friendly coolant-lubricant separation design and chip disposal system, and the user-friendly operation features all make the MV Series the best value for its money paid.

# High Speed, High Precision Spindle

Deploy precision angular contact bearings of high speed and high precision features; the maximum speed of standard spindle reaches 8,000rpm, 10,000rpm. (opt.)

Optionally, the Hi-Lo Gear Transmission box can be offered for higher torque output requirements, and its maximum speed reaches at 8,000rpm, 10,000rpm. (opt.)

Additionally, the IDD spindle can be offered as an option for even more perfect accuracy & movement. The max. spindle speed is at 10,000rpm. (opt.)

POWER
L Low Speed
H High Speed

TORQUE
L Low Speed
H High Speed

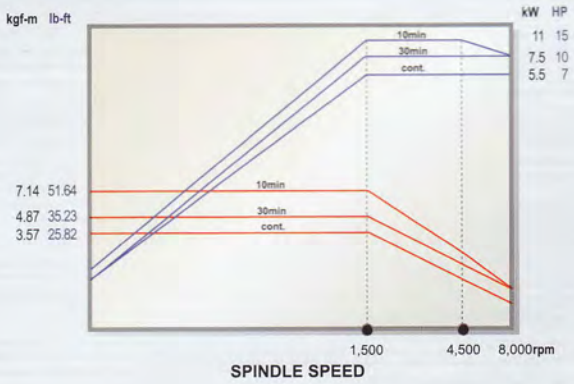


SPINDLE SPEED

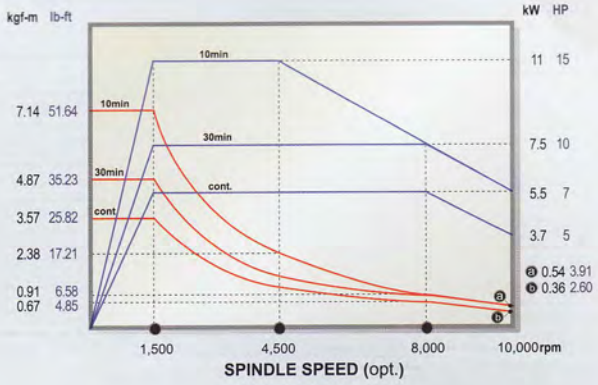


SPINDLE SPEED (opt.)

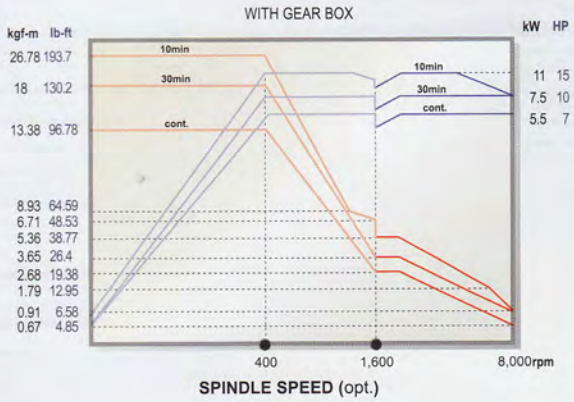


SPINDLE SPEED (opt.)

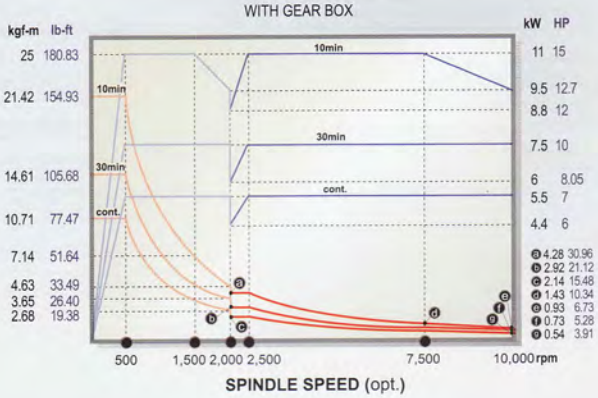


SPINDLE SPEED (opt.)

## Fast & Reliable ATC Unit

- Two types of ATC unit are available for different job requirements.
- The 20T carousel type arm-less system is economical, effective and safe design, as it deploys specially designed detachable holder jaws with power spring clip, and is independently posted.
- The protection lid of tool magazine is added to stop chips and dusts invading into, which assures the cleanness of tools.
- The 24T/30T arm type system (opt.) is driven by roller gear cam of fast and reliable features; it lowers the idle time and enhances the machining efficiency.

20T (std.)

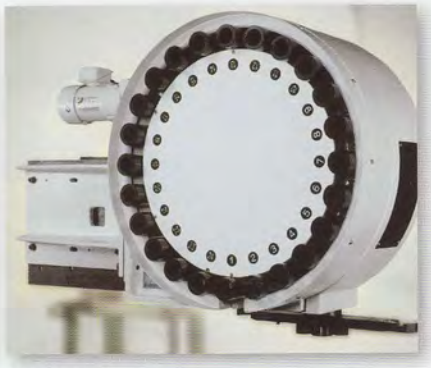

24T/30T (opt.)

# MV Series 66A ▪ 76A

## High Rigidity Feed System of the Best Force Flow Design

- The wide span 650mm 25.59" Y-axis base with rigid dual-wall saddle and the V-rib designed base of 860mm 33.86" anchor bolt pitch fully support the X-axis movement for the most dynamic accuracy.
- The no counter weight design Z-axis makes the rapid peck drilling and Z-axis rapid movement at extreme smoothness, and assures the utmost machining accuracy.
- The 510mm 20.1" Y-axis stroke meets most molds & dies machining operation and job shop requirements.
- Various spindle modules, standard with 8,000rpm, 10,000rpm (opt.), and option with high-low gear transmission box enhances the machining possibility.
- Eco-friendly design separates completely the lubricant and coolant to save the operation and maintenance costs.
- The machine can be loaded within standard HQ container in transportation to save the ocean freight, and enhance the competitiveness.

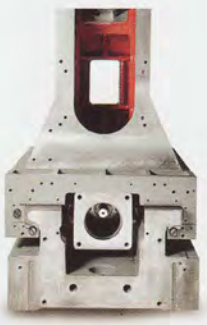

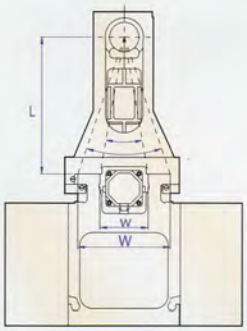


### The Z-axis is outside support design

1) The best L/W ratio.
2) Secure the utmost cutting rigidity.
3) The Z-axial movement is very smooth.

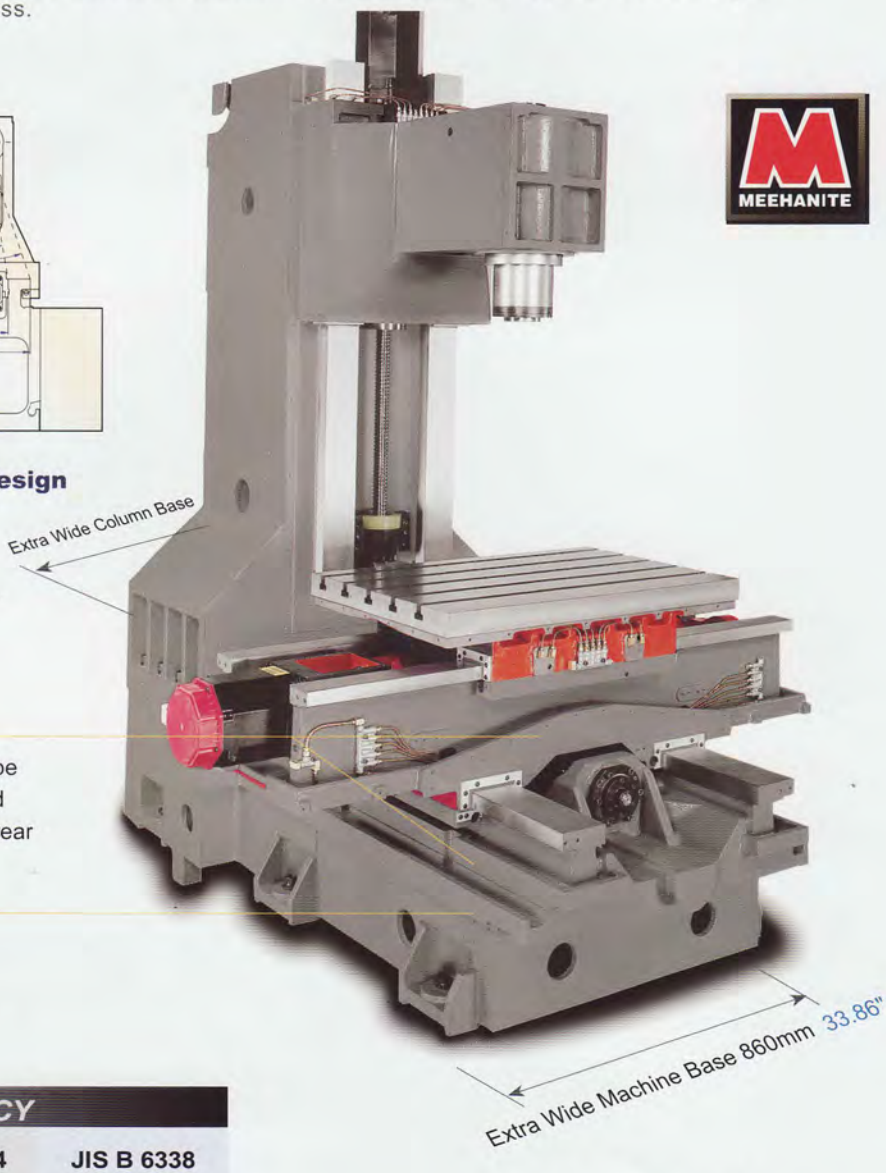


### Lubricant Trough

The lubricant from 3-axis slide ways will be collected through the designed route, and drained to the used lubricant tank at the rear side of machine.

### Coolant Trough

To prevent the coolant from leaking through the joint of cover and the base, the coolant is drained to the front coolant collecting tank.

### MV66A/76A ACCURACY

| Standard / Tolerances | | ISO 10791-4 | JIS B 6338 (1985) |
|---|---|---|---|
| **Axial Travel** | | Full Length | — |
| **Positioning** | **A** | 0.010mm (0.0039") | 0.004/300mm (0.00016"/11.81") |
| **Repeatability** | **R** | 0.007mm (0.0027") | ±0.003mm (±0.00012") |

*VDI/DGQ3441 is equivalent to A of ISO10791-4, and PS is equivalent to R.*
*All values shown above are measured for machine in good air conditioned environments.*

### Axial Rapid Feedrate

| | |
|---|---|
| X | 30m/min. 1,181ipm |
| Y | 30m/min. 1,181ipm |
| Z | 24m/min. 945ipm |

# MV Series 86A ■ 106A

## High Rigidity Feed System of the Best Force Flow Design

- The wide span 800mm 31.50" Y-axis base with rigid dual-wall saddle and the V-rib designed base of 1,030mm 40.55" anchor bolt pitch fully support the X-axis movement for the most dynamic accuracy.
- The unique Z-axis guide-bar counter weight design makes the rapid peck drilling and Z-axis rapid movement at extreme smoothness for assuring the machining accuracy.
- The 600mm 23.6" Y-axis stroke meets most molds & dies machining operation and job shop requirements.
- Various spindle modules, standard with 8,000rpm, 10,000rpm (opt.), and option with high-low gear transmission box enhances the machining possibility.
- Eco-friendly design separates completely the lubricant and coolant to save the operation and maintenance costs.
- The machine can be loaded within standard HQ container in transportation to save the ocean freight, and enhance the competitiveness.

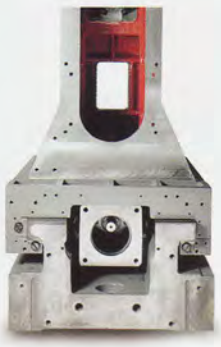

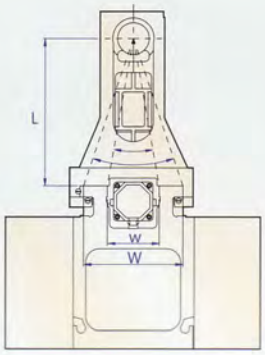


### The Z-axis is outside support design

1) The best L/W ratio.
2) Secure the utmost cutting rigidity.
3) The Z-axial movement is very smooth.

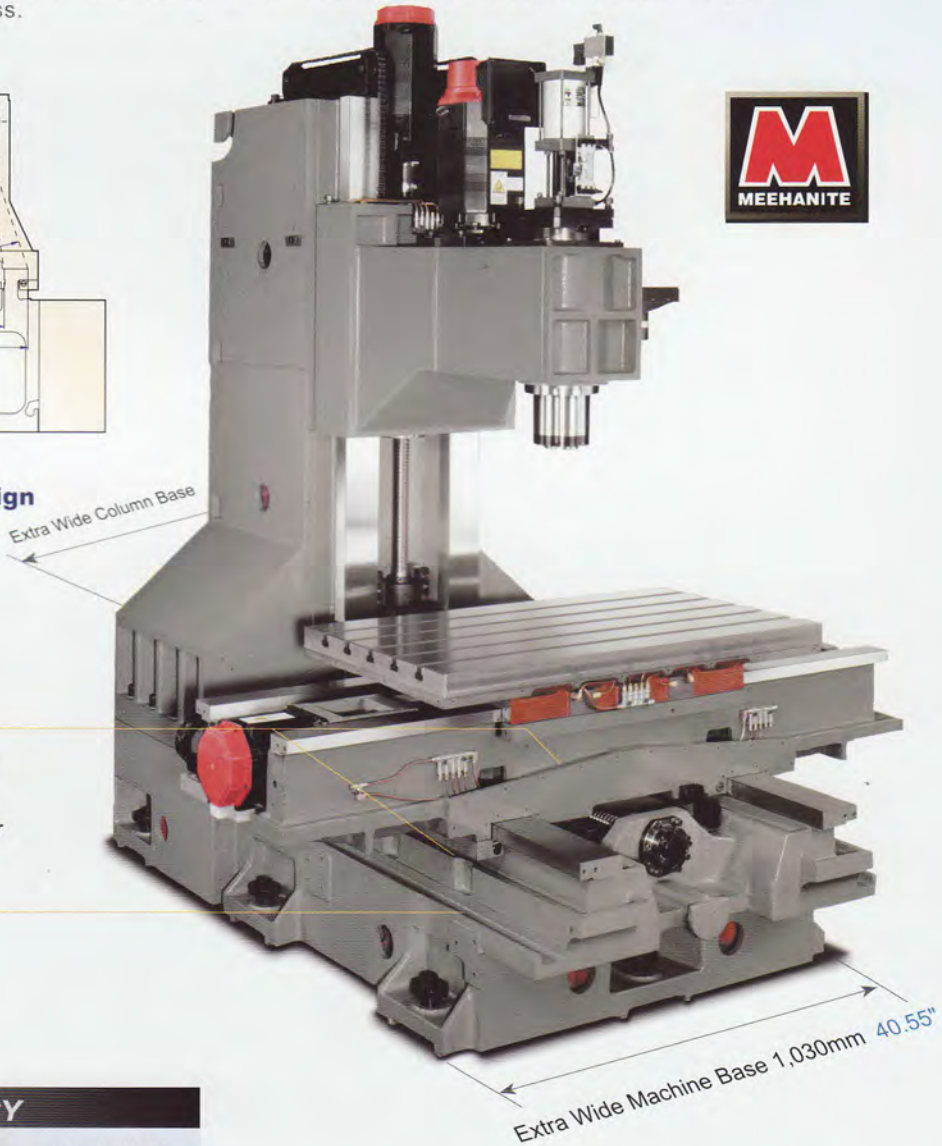


### Lubricant Trough

The lubricant from 3-axis slide ways will be collected through the designed route, and drained to the used lubricant tank at the rear side of machine.

### Coolant Trough

To prevent the coolant from leaking through the joint of cover and the base, the coolant is drained to the front coolant collecting tank.

### ■ MV 86A / 106A ACCURACY

| Standard / Tolerances | | ISO 10791-4 | JIS B 6338 (1985) |
|---|---|---|---|
| Axial Travel | | Full Length | — |
| Positioning | A | 0.010mm (0.0039") | 0.004/300mm (0.00016"/11.81") |
| Repeatability | R | 0.007mm (0.0027") | ±0.003mm (±0.00012") |

*VDI/DGQ3441 is equivalent to A of ISO10791-4, and PS is equivalent to R.*
*All values shown above are measured for machine in good air conditioned environments.*

### Axial Rapid Feedrate

| | | |
|---|---|---|
| X | 30m/min. | 1,181ipm |
| Y | 30m/min. | 1,181ipm |
| Z | 24m/min. | 945ipm |

# High Efficiency Utmost Performance Integration, Solution & Automation

### User-friendly Operation Panel

- The swivel operation panel of appropriate height and clear modular switches lineup is easily operated and conforms to the highest safety compliance.
- All signals and operation messages are clearly displayed for immediate attention and easy maintenance.
- The installation of detachable MPG hand wheel is convenient to job set-up operation and trials.

MV66A/MV76A

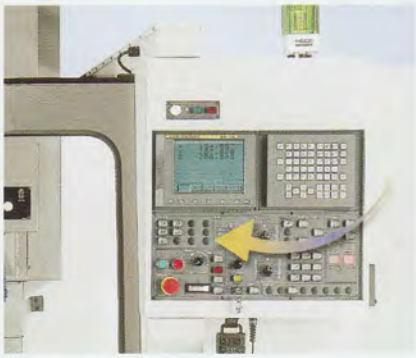

MV86A/MV106A

### Easy-to-approach design of great benefits

- The shortest possible distance between the spindle center line and where the operator stands:
  MV66/76A 820mm 32.28"
  MV86/106A 900mm 35.43"
- The most appropriate door open width, table height, and spindle approach.
- The extra large Y-axis stroke capacity outweighs the other products of the same specifications.
- The distance between the spindle center line and column front:
  MV66/76A 527mm 20.75"
  MV86/106A 617mm 24.29"
- Accommodate widely and variously in machining applications.

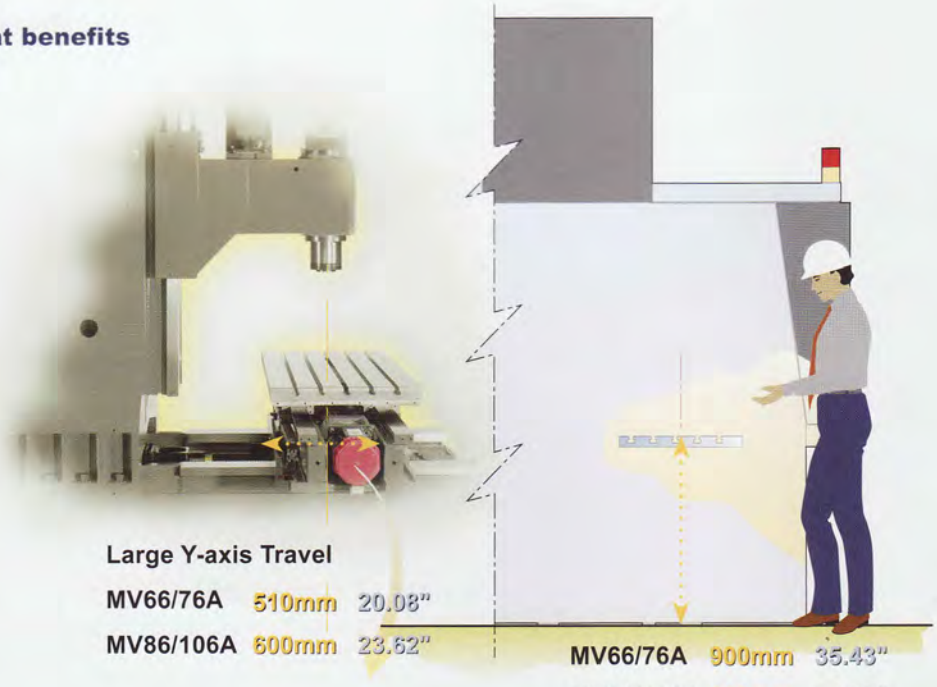


**The Front Splash Tray is slant design, and the reinforced guard prevents chips from piling up at both sides. Chips are collected at the front drawers, and convenient for clearing up.**

MV86A / MV106A

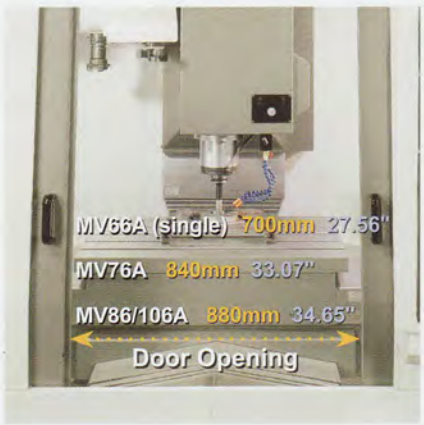


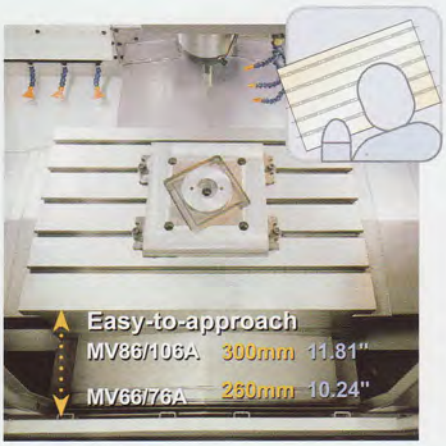

# MV Series 66A DIMENSIONS

## TABLE SIZE

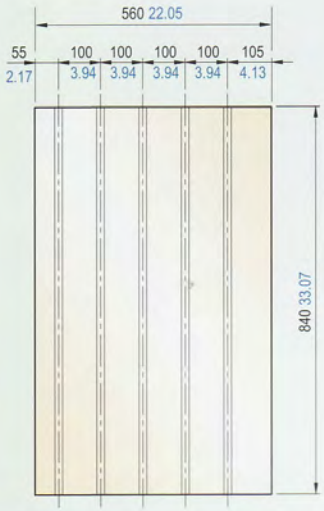


## T-SLOTS

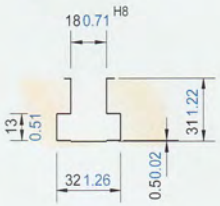


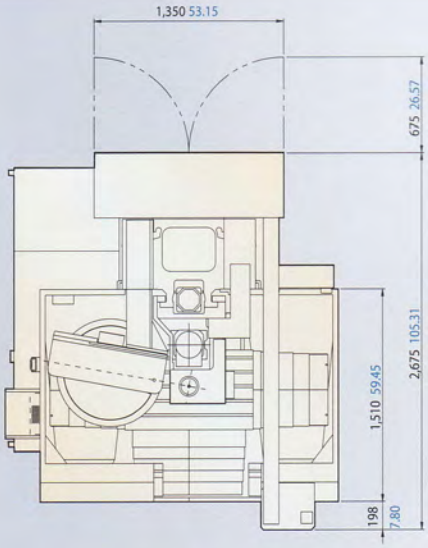


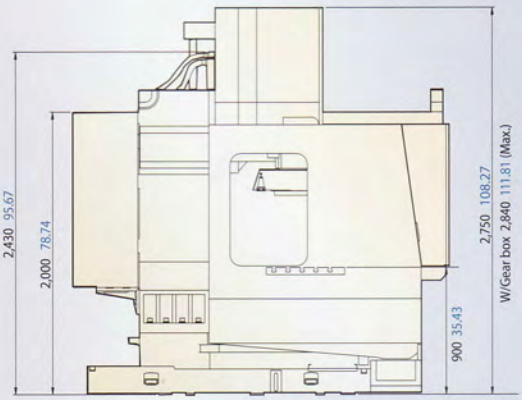


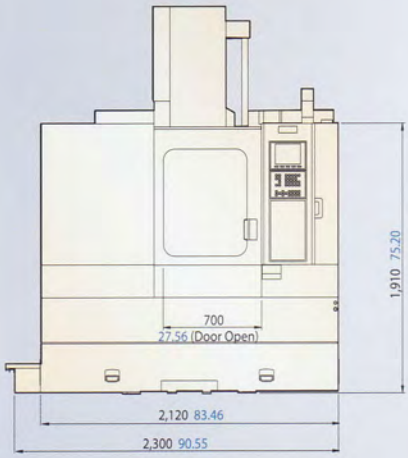


The above diagram shows the dimensions of a machine with 20T magazine;
The same dimensions fit for a machine with 24T/30T magazine, but only the magazine looks different.

**Unit : mm inch**

# MV Series 76A DIMENSIONS

## TABLE SIZE

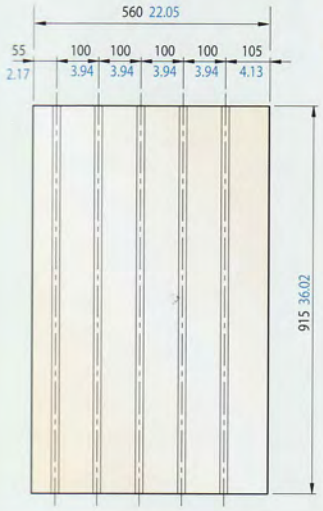


## T-SLOTS

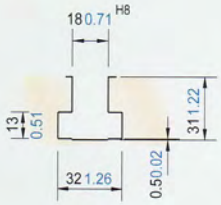


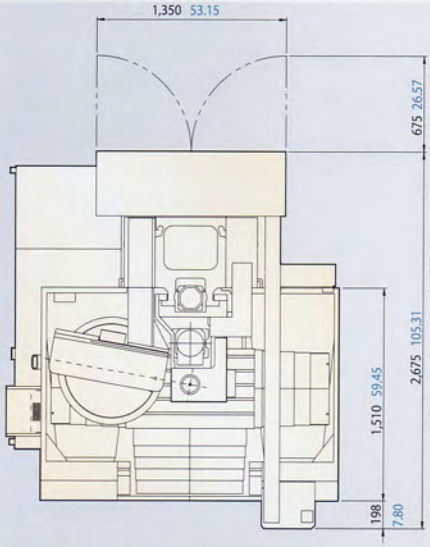


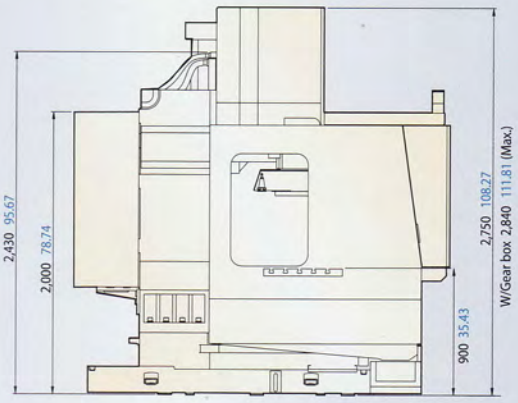


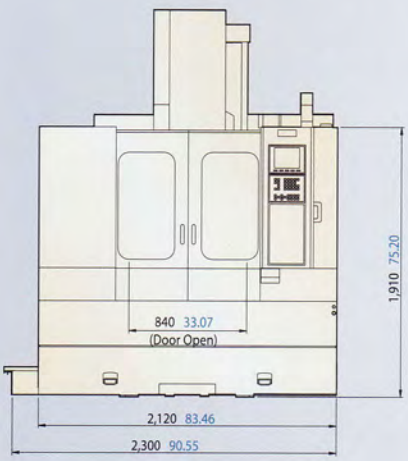


The above diagram shows the dimensions of a machine with 20T magazine;
The same dimensions fit for a machine with 24T/30T magazine, but only the magazine looks different.

Unit : mm inch

# MV Series 86A ■ 106A
## DIMENSIONS

### TABLE SIZE

### T-SLOTS

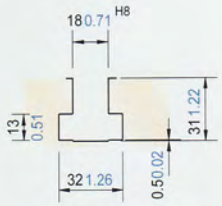


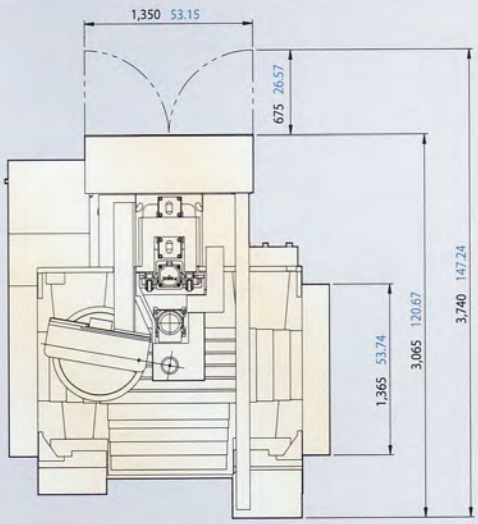


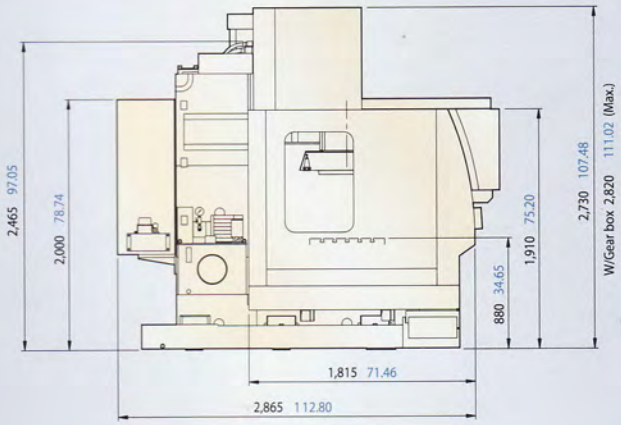


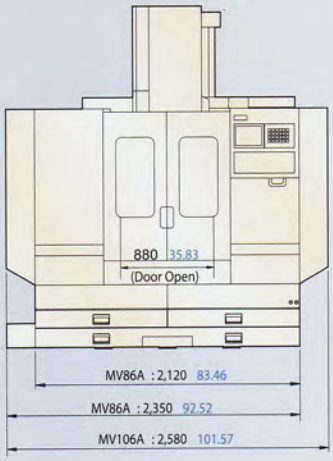


The above diagram shows the dimensions of a machine with 20T magazine;
The same dimensions fit for a machine with 24T/30T magazine, but only the magazine looks different.

Unit : mm inch

# MXP-200*i*

## YCM CONTROL by FANUC

- High performance AC digital servo & spindle drives
- High responsive vector drives technology for high accuracy machining
- Powerful servo motors with super precision absolute positioning encoders
- High resolution 10.4"color LCD display with dynamic graphic display
- Manual guide i conversational function greatly reduces programming and setup time
- Built-in AI NANO CC and high-speed JERK function
- High speed rigid tapping, helical interpolation, custom macro B, and tool path graphics
- Large program capacity with 1,280 meters of memory
- Full alphanumeric keyboard allows easy program editing
- PCMCIA slot for easy file transfer and memory expansion
- RS-232C interface ready for fast program transfer
- Combined uses of many high performance microprocessors, high speed memory and the adoption of Multi-CPU system for super high speed control processing
- The most reliable CNC control, with the failure rate of under 0.01 per month

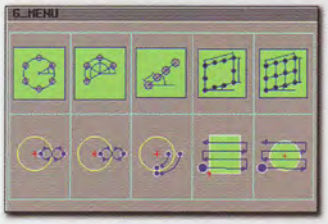


### G-menu Function

User-friendly G-menu function provides multiple machining cycles that greatly simplifies programming steps

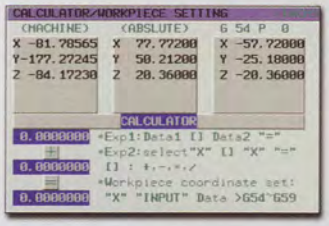


### Calculator Function

Convenient calculator function provides fast calculation and setting of workpiece offsets

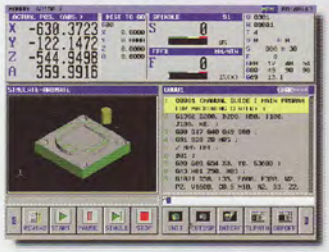


### Easy Shop-floor Programming Manual Guide i

Easy to use conversational software offers convenience of part programming right on the shop-floor with 3D graphical display and full simulation function

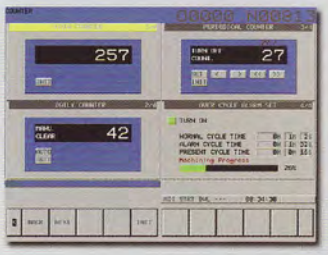


### Counter Function

Allows user to easily keep track on number of workpieces with:

- Main Counter
- Periodical Counter
- Daily Counter
- Over Cycle Alarm

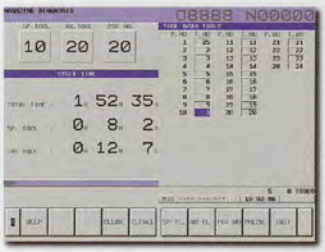


### Intelligent Tool Data Management

Comprehensive tool data management function allows operators to conveniently monitor and efficiently manages all position in tool magazine

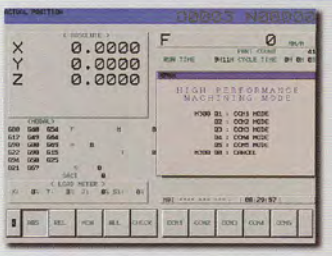


### High Performance Machining Mode: M300

High performance mode with 5 settings that allows user to select for the best machining results

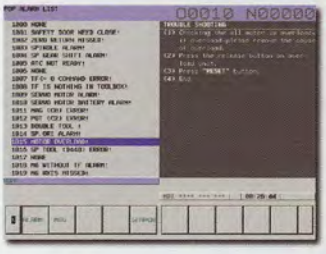

### Pop-up Alarm Display

Detailed troubleshooting procedures are automatically displayed when machine alarm occurs that allows users to quickly restore machine status to minimize downtime

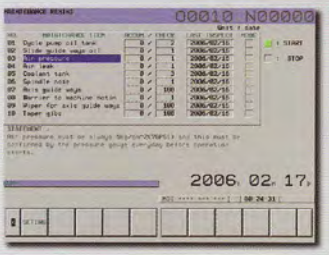


### Intelligent Maintenance Reminder

Pre-set maintenance schedules are programmed to remind operators to inspect periodically and to prolong machine life

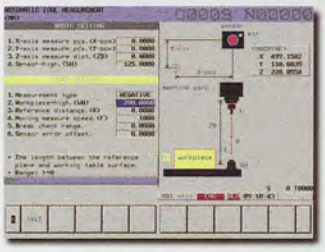

### Automatic Tool Length Measurement

Pre-set macros and graphical procedure are provided for operation of automatic tool length measurement function

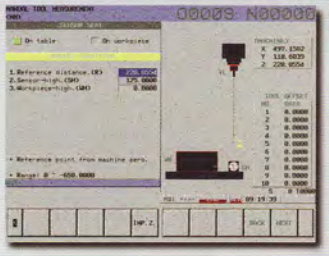

### Manual Tool Length Measurement

Easy setup of tool length measurement provides convenient setting of tool offsets data from one tool to the other

# i OPERATION Plus

**Software enhancement exclusively from YCM**

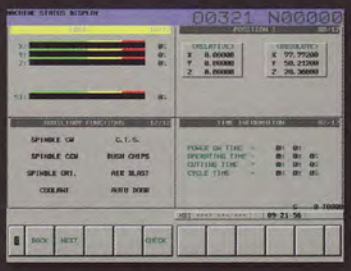

## Multi-function Display

Easily select multiple windows from the following list of display for your monitoring needs.

- G-code Status
- Feedrate
- Parts Count
- Controller Running Hours
- M-code Status
- Tool Data
- Machining Hours
- Spindle Load
- Spindle Status
- Work Coordination
- Date and Time
- Function Display

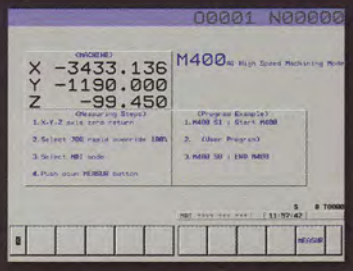


## High Speed Machining Mode: M400

Artificially intelligent machining function that is developed from accumulation of all YCM knowledge and experience on high speed to achieve the fastest cycle time with best machining results.
Machining efficiency improved by 25% without sacrificing machining accuracy.

**+25%**

Efficiency increased by

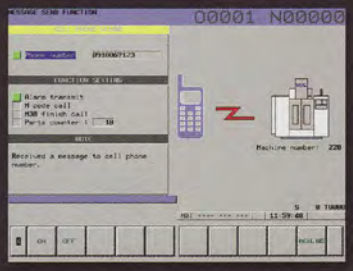

## Wireless Message Notification (opt.)

Integrating GSM communication and CNC technology, YCM developed the WMN system for wireless notification of machine and work status report.

# i·Direct

**A remote monitoring system**

i-Direct, the latest YCM software enhancement innovation is designed for remote monitoring of factory production line. Its powerful features include reporting back complete machine operation status, record, history and data analysis. As soon as the system gets an alarm signal, instant messages will be sent thru e-mail or SMS (can input 3 sets of cell phone numbers).

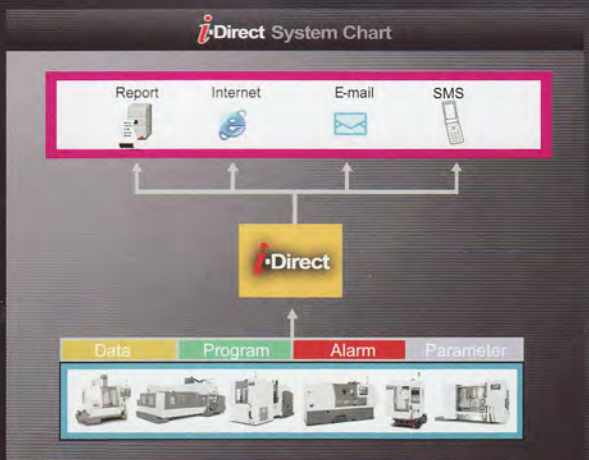

User account administration

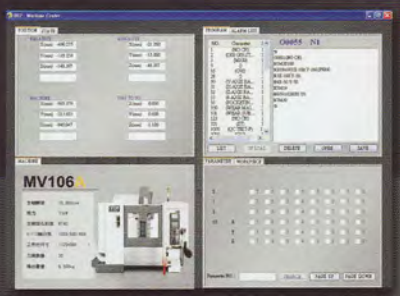


Individual machine status display

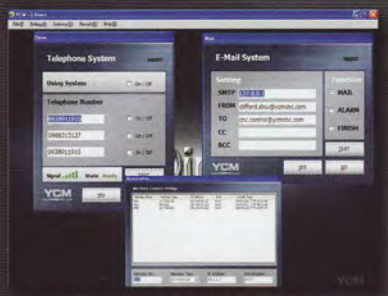


Machine model, number, e-mail, SMS and IP setup

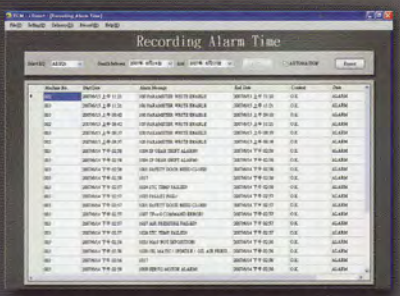


Complete production, standby and down time record

Overall machines status display

Production data graphical analysis

## SPECIFICATIONS

| | MV66A | MV76A | MV86A | MV106A |
|---|---|---|---|---|
| **SPINDLE** | | | | |
| Spindle Speed (opt.) | 45~8,000rpm (10,000rpm) | | | |
| Spindle Power (opt.) | 5.5/7.5/11kW (7.5/11/15kW) 7.5/10/15HP (10/15/20 HP) | | | |
| Spindle Taper | BT40 | | | |
| Front Bearing Diameter | ø70mm ø2.76" | | | |
| **TRAVEL** | | | | |
| X-axis Travel | 660mm 25.98" | 762mm 30" | 850mm 33.46" | 1,020mm 40.16" |
| Y-axis Travel | 510mm 20.08" | | 600mm 23.62" | |
| Z-axis Travel | 560mm 22.05" | | 600mm 23.62" | |
| Distance Between Spindle Nose & Table Top | 120~680mm 4.72"~26.77" | | 80~680mm 3.15"~26.77" | |
| **TABLE** | | | | |
| Table size | 840mm × 560mm 33.07" × 22.05" | 915mm × 560mm 36.02" × 22.05" | 950mm × 600mm 3.74" × 23.62" | 1,120mm × 600mm 44.09" × 23.62" |
| T-Slots × Size × Pitch | 5 × 18mm × 100mm 5 × 0.71" × 3.94" | | | |
| Max. Load on Table | 500kg 1,102 lb | | 800kg 1,764 lb | |
| **FEEDRATE** | | | | |
| Rapid Feedrate | 30/30/24m/min. 1,181/1,181/945ipm | | | |
| Cutting Feedrate | 1~10,000mm/min. 0.04~394ipm | | | |
| **ATC** | | | | |
| Tool Magazine Capacity (opt.) | 20T (24/30T) | | | |
| Max. Tool Weight (per piece) | 6kg/pc 13.23 lb/pc | | | |
| Pull Stud | MAS-P40T-1 | | | |
| Max. Tool Dimensions | 20T:ø95mm × 300mm 20T:ø3.74" × 11.81"<br>24T:ø90mm × 300mm 24T:ø3.54" × 11.81"<br>30T:ø76mm × 300mm 30T:ø2.99" × 11.81" | | | |
| Max.Tool Dimensions (Without adjacent tools) | 20T/30T:ø125mm 24T:ø140mm 20T/30T:ø4.92" 24T:ø5.51" | | | |
| Tool Changer Method | 20T:Armless Type 24/30T:Arm Type | | | |
| Tool Selection Method | 20T:Sequence 24/30T:Random | | | |
| **GENERAL** | | | | |
| Pneumatic Supplier | 5.5kg/cm² 78.2psi | | | |
| Power Consumption | 25kVA (25kVA) | | | |
| Machine Weight | 5,000kg 11,023 lb | 5,100kg 11,243 lb | 6,450kg 14,220 lb | 6,500kg 14,330 lb |

Note: The manufacturer reserves the right to modify the design, specifications, mechanisms, etc. to improve the performance of the machine without notice. All the specifications shown above are just for reference.

### STANDARD ACCESSORIES

- Tool Kit
- Work Lamp
- Pilot Lamp
- Coolant Gun
- Coolant Equipment System
- Cuttng Air Blast
- Spindle Air Blast
- Spindle Air Seal
- Central Lubrication System
- Oil Skimmer
- Leveling Blocks and Bolts
- Heat Exchanger for Electrical Cabinet
- Mechanical, Electrical & Operating Manuals
- Rigid Tapping
- Guideway Cover(X,Y,Z)
- Chip Enclosure
- Air Gun
- Automatic Tool Change
- CNC Controller: MXP-200i

### OPTIONAL ACCESSORIES

- Coolant Through Spindle System
- Foundation Bolts
- Oil-Mist Coolant System
- Oil Hole Holder Function
- Chips Flush Coolant System
- Chip Conveyor
- Workpiece Measurement System
- Automatic Power Off Device
- A/C. Cooler for Electrical Cabinet
- Optical Scale
- Automatic Door
- Safty Door
- 4th Axis Rotary Table
- Spindle Cooling System
- Heavy Duty Coolant Pump
- Auto Tool Length Measurement System
- Full Chip Enclosure
- Circular Coolant Nozzle
- Oil-Mist Collector
- Hi-Low Gear Transmission
- Machine Height 250mm More (MV86A,MV106A)
- CNC Controller: HEIDENHAIN iTNC-530
- CNC Controller: FANUC 18i-MB

YCM®

**YEONG CHIN MACHINERY INDUSTRIES CO., LTD.**
888 HOMU RD., HSINCHUANG ■ SHENGANG, TAICHUNG, TAIWAN
Web Page:www.YCMCNC.com ■ Email: sales@YCMCNC.com

ISO 9001 ISO 14001 CE

**Tel : +886-4-2562-3211**
**Fax: +886-4-2562-6479**

102010-E11-2000